Publication No. 80-e01

STATE OF WASHINGTON

Dixy Lee Ray
Governor

DEPARTMENT OF ECOLOGY

7272 Cleanwater Lane, Olympia, Washington 98501

WA-15-0040

MEMORANDUM
December 30, 1980

To: Dave Wright

From: Will Abercrombie and Bill Yake

Subject: Port Orchard Sewage Treatment Plant Class II Inspection

Introduction:

On September 9 and 10, 1980, a Class II inspection was conducted at the Port Orchard Sewage Treatment Plant (STP) Department of Ecology (DOE) representatives in attendance during the inspection were Dave Wright (Northwest Regional Office) and Bill Yake and Will Abercrombie (Water and Wastewater Monitoring Section). The STP representative present during the inspection was Bill Dement (operator).

Laboratory analyses requiring moderately sophisticated facilities are conducted at the Central Kitsap STP near Brownville. Present for the laboratory review segment of the inspection were Will Abercrombie and Bill Yake, Bill Dement, Ralph DeClements (Central Kitsap STP operator), and Steve Hanenburg (Central Kitsap STP lab technician).

Setting:

The Port Orchard STP is designed as a primary treatment facility consisting of a circular clarifier with an inverted Imhoff cone in its center (Figure 1). Raw influent enters the plant via two (2) six-inch force mains, travels through a grit chamber, thence to a six-inch Parshall flume. Immediately downstream of the Parshall flume is the comminutor through which the influent flows under normal operating conditions. When the comminutor is inoperative, the flow is diverted to a parallel channel containing a bar screen. The influent then enters a circular trough, spills into the clarifier proper, and eventually passes through a launder ring into the effluent trough. The effluent is piped to a small chlorine contact box and exits the plant via a 700 foot-long, 24-inch diameter effluent pipe. The outfall is located approximately 50 feet outside the yacht harbor in Sinclair Inlet (segment number 07-15-03).

In theory, settleable solids sink to the bottom of the clarifier where anaerobic digestion occurs over time. The digested sludge is wasted from the bottom of the clarifier as needed.

Figure 1. Port Orchard STP.

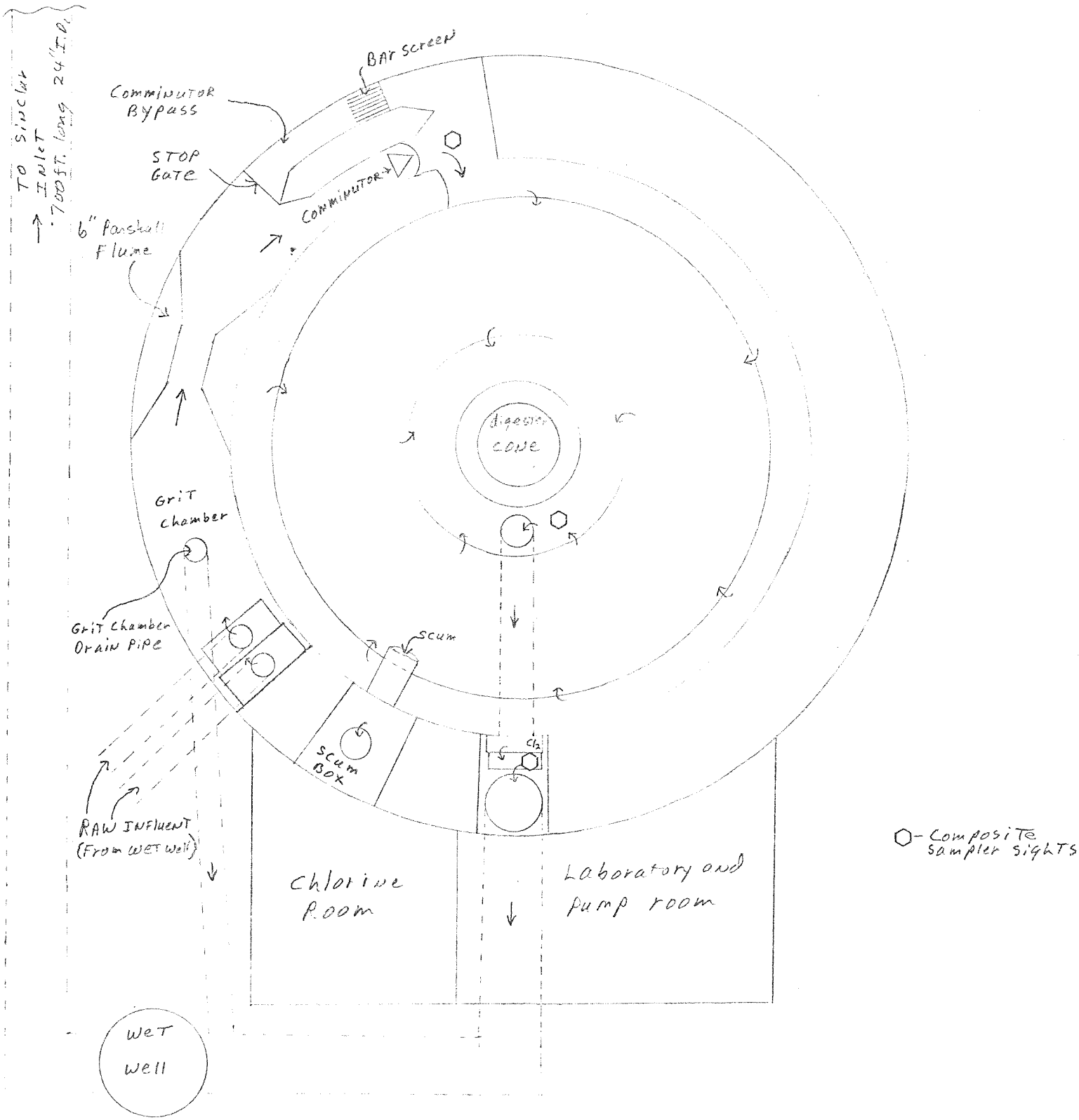

Memo to Dave Wright
Port Orchard STP Class II Inspection
December 30, 1980

Inspection Procedures:

The Parshall flume was measured and determined to be within limits specified for a six-inch throat, except for the point at which the head is measured (Figure 2). Head is measured using a float which swings in an arc as the flow fluctuates. This results in a 2/3 C value ranging from 21 to 14-1/2 inches, causing an undetermined amount of error in flow measurement.

A Manning dipper was installed on the Parshall flume on September 9, 1980 (Figure 3). Initially, the dipper was set to read 100 percent at eight inches of head, or a maximum flow of 0.850 million gallons per day (MGD). The influent pumps were down for grit chamber cleaning and the influent was being stored in a wet well when the dipper was installed. Upon reactivating the pumps, the flow increased to 1.10 MGD which exceeded the dipper capacity. At 1115, the dipper was reinstalled with a maximum flow of 1.33 MGD. An additional problem occurred when the influent pumps and comminutor were turned off from 1320 to 1530 in order to repair a pump. The pumps were restarted but the comminutor was inadvertently left off causing the influent to overflow the flume, resulting in erroneous dipper and STP totalizer readings. In order to acquire a 24-hour average flow, hourly average flows were calculated from the strip chart and then averaged on a 24-hour basis (Table 1).

Three Manning automatic samplers were installed on September 9, 1980. Grab samples were collected and analyzed for field parameters on September 9, 1980 and again on September 10 (Table 2). Influent and unchlorinated effluent 24-hour composite samples were split with the STP operator. We had intended to split the STP operator's influent and effluent sample grabs to determine their validity. Unfortunately, the total volume taken by the operator was not enough to allow a sample split.

On September 10, 1980, Rhodamine WT dye was added to the STP effluent in order to determine detention time in the outfall pipe and to pinpoint the outfall location.

A sludge sample was taken for metals analysis from the bottom of the clarifier on September 10, 1980.

Results and Discussion:

The Port Orchard STP was unable to comply with the original NPDES permit discharge limitations. The City of Port Orchard submitted documentation to the DOE specifying why they were unable to comply, despite all reasonable best efforts. Accordingly, the Department issued an amendment to the permit (Docket No. DE 77-401) in order to allow compliance. The amendment resulted in elevated BOD_5, TSS, and fecal coliform permit limits.

Figure 2.

PARSHALL FLUME

Dimensions & Flow

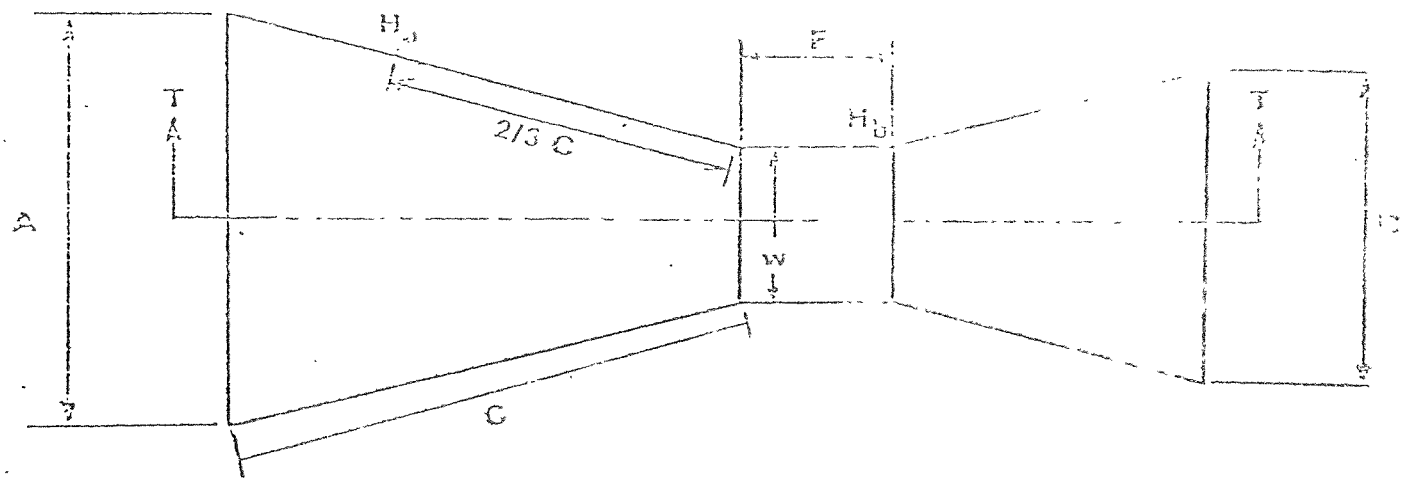

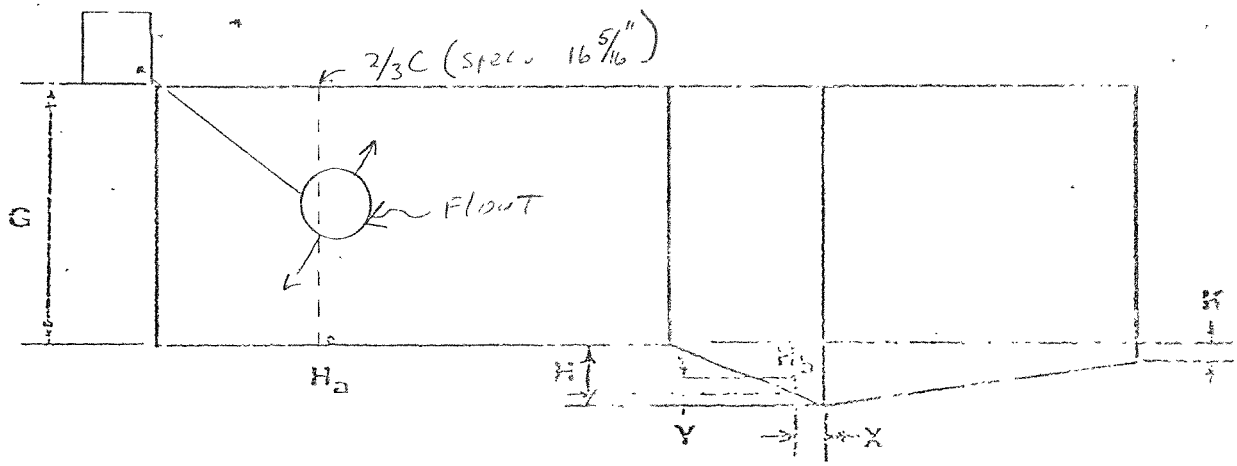

INches

Code	Spec's	Measured
A	15 1/2	15 7/8
B	15 1/2	14 1/2
C	24 7/16	24 1/4
2/3 C	16 5/16	BOTTOM 21 TOP 14 1/2
E	12	12 1/2
G	18	16 3/4
H	4 1/2	4 1/4
K		
W	6	BOTTOM 6 TOP 5 3/4
X		
Y		

Time	H_a	H_b	Theoretical Flow	Recorded Flow

Figure 3. Manning Dipper 24-hour strip chart.

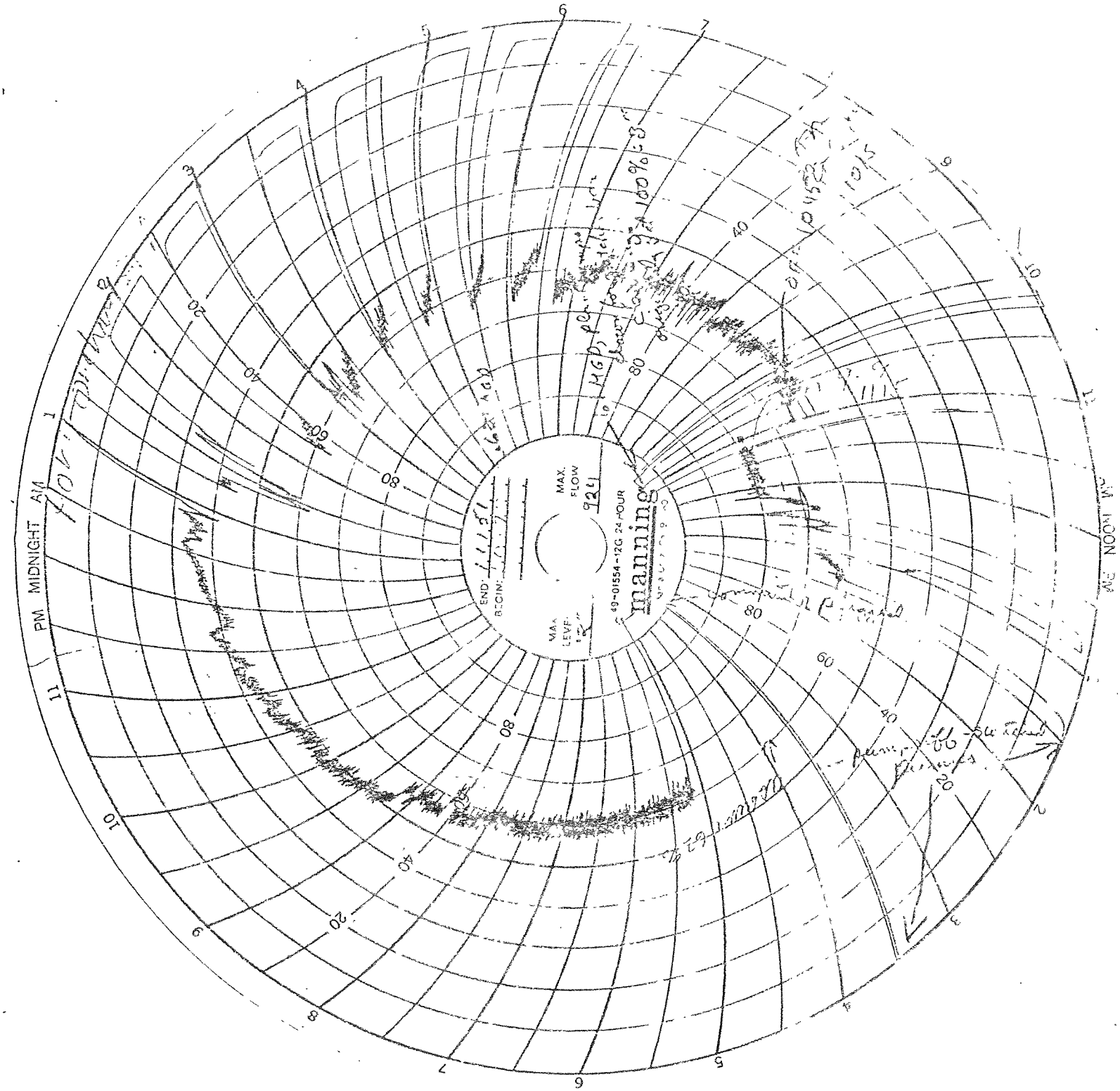

Table 1. 24-hour Average Flow Determination from Dipper Strip Chart.

	September 9, 1980														September 10, 1980									
TIME	1100 to 1200	1200	1300	1400	1500	1600	1700	1800	1900	2000	2100	2200	2300	2400	0100	0200	0300	0400	0500	0600	0700	0800	0900	1000 to 1100
Time (total)1/															2.4	2.4	2.4	2.4	2.4	2.4				
Time off1/															1.2	1.6	1.0	1.0	1.5	0.5				
Time on1/															1.2	0.8	1.4	1.4	0.9	1.9				
% of Time on	100	100	100	100	100	100	100	100	100	100	100	100	100	100	50	33	58	58	38	79	100	100	100	100
Q while on (%)	78	70	63*	63*	63*	62*	61*	60*	58	57	52	47	42	37	50	58	57	56	59	61	60	60	62	63
Q while on (MGD) 100% = 1.33 MGD	1.04	.93	.84	.84	.84	.82	.81	.80	.77	.76	.69	.62	.56	.49	.66	.77	.76	.74	.78	.81	.80	.80	.82	.84
1 hr. avg. flow	1.04	.93	.84	.84	.84	.82	.81	.80	.77	.76	.69	.62	.56	.49	.33	.25	.44	.43	.30	.64	.80	.80	.82	.84

Dipper 24-hour average flow = 0.68 MGD

18-hour STP totalizer flow = .33 MGD
(1715 to 1045)
9/9 9/10

18-hour Manning totalizer flow = .45 MGD
(1715 to 1045)
9/9 9/10

1/Arbitrary unit of measure

*Estimated hourly flow

Table 2. Port Orchard Class II 24-hour Composite Sampler and Grab Sample Schedule

Composite Sampler	Sample Aliquot	Sampling Period	Location	Field Parameters Tested
Influent	230 ml/30 min.	9/09/80 - 1026 to 9/10/80 - 0900	below comminutor	pH, Temp., Cond
Unchlor. Eff.	250 ml/30 min.	9/09/80 - 1032 to 9/10/80 - 0910	Eff. trough prior to chlorination	pH. Temp., Cond.
Final Chl. Eff.	220 ml/30 min.	9/09/80 - 1040 to 9/10/80 - 1120 (see text)	below chl. mixing box	pH, Temp., Cond.

Grab Samples	Date - Time	Location	Field Parameters Tested
Influent	9/09/80 - 1035	below comminutor	pH, Temp., Cond.
Influent	9/10/80 - 0845	below comminutor	pH, Temp., Cond.
Unchlor. Eff.	9/09/80 - 1130	Eff. trough prior to chl.	pH, Temp., Cond.
Unchlor. Eff.	9/10/80 - 0900	Eff. trough prior to chl.	pH. Temp., Cond.
Final Chl. Eff.	9/09/80 - 1055	below chl. mixing box	pH, Temp., Cond
Final Chl. Eff.	9/10/80 - 0945	below chl. mixing box	TCR
Final Chl. Eff.	9/10/80 - 0955	below chl. mixing box	Fecal Coliform (grab)
Marine	9/10/80 - 1035	in plume	TCR, D.O.
Marine	9/10/80 - 1045	Edge of plume	TCR, D.O.

Memo to Dave Wright
Port Orchard STP Class II Inspection
December 30, 1980

At the present time, the STP is in violation of paragraph S2 and S3 of their permit in that 24-hour composite samples are not being collected for BOD_5 and TSS determination. Prior to this inspection, the operator took one grab sample per week for BOD_5 and TSS analysis. On our recommendation the operator is presently using an eight-hour grab composite sampling scheme.

The operator, Bill Dement, was reporting information on the Daily Monitoring Report (DMR) incorrectly. These were relatively minor inaccuracies, but they made interpretation of the DMR's difficult. Mr. Dement was informed of the correct procedures for filling out the DMR and we feel confident that subsequent reports will be concise and accurate.

Cleaning of the grit chamber is presently accomplished by washing the grit directly into the effluent line. This practice can be construed as a plant bypass and is in violation of paragraphs S5 and S7(a) of the NPDES permit.

Treatment Plant Performance:

Port Orchard's effluent sample is taken prior to chlorination. During the inspection period, the unchlorinated effluent sample had higher BOD_5 values than the chlorinated sample even though dechlorination and reseeding was used. This phenomenon is probably due, at least in part, to the fact that chlorine is a strong oxidizing agent and oxidizes some of the organics thus reducing BOD_5 in the effluent. Table 3 shows the results of laboratory and field analysis for parameters tested during the Class II. The BOD_5 concentration of the unchlorinated effluent was higher than the weekly permit limitation. The BOD_5 concentration of the chlorinated effluent sample was within weekly permit limitations. The DMR for the inspection period would show the plant to be in violation of permit limits for mg/L of BOD_5.

Results show that the STP was in violation of permit limits for lbs/day of BOD_5. While mg/L values for TSS were well within discharge limitations, the lbs/day of TSS were near the limit. On reviewing recent DMR's and personal communication with the operator, it is apparent that failure to meet BOD_5 and TSS permit limitations is a recurring problem.

Primary sedimentation tanks are designed to remove settleable solids and floating material. When such facilities are designed and operated properly, they will remove from 50 to 65 percent of the suspended solids and 25 to 40 percent of the BOD_5 (Metcalf and Eddy, 1972).

Table 3. Laboratory Results

Parameter	DOE Results Influent	DOE Results Unchlor. Effluent	DOE Results Final Chlor. Effluent	STP Results Influent	STP Results Unchlor. Effluent	Design and/or Permit Limits	
Flow (MGD)			0.68 1/			0.55 annual avg.	
BOD_5 (mg/L)	250	200	150	215	195	180/wk.	165/mo.
% Reduction			40%				
lbs/day	1418	1134	850	1219	1106	600/wk.	550/mo.
TSS (mg/L)	220	69	66	166	70	140/wk.	115/mo.
% Reduction			70%				
lbs/day	1248	391	374	941	397	450/wk.	400/mo.
Fecal Coliform (org/100 ml)			80 2/* 300 3/* 260 4/*		<10*	1500/wk.	700/mo.
D.O. (mg/L)		0.0 5/					
TCR (mg/L)			2.8 6/				
pH (S.U.)	7.1 7/	6.8 7/	6.5 7/			6.0-9.0	
Sp. Cond. (µmhos/cm)	713 7/	678 7/	600 7/				
Turb. (NTU)	67	51	43				
COD (mg/L)	440	300	260				
NH_3-N (mg/L)	18	18	19				
NO_2-N (mg/L)	<0.25	<0.25	<0.2				
NO_3-N (mg/L)	<0.25	<0.25	0.2				
T. Inorganic N (mg/L)	18.5	18.5	19.4				
O-PO_4-P (mg/L)	4.5	4.5	4.6				
T. Phos. (mg/L)	8.9	6.9	7.5				
T. Solids (mg/L)	620	500	450				
TSS (mg/L)	220	69	66				
TNVS (mg/L)	330	330	300				
TNVSS (mg/L)	23	10	15				
TOC (mg/L)	87	91	80				
Temp. (°C)	18.9 5/	18.5 5/	18.4 5/				

1/Manning Dipper 24-hour average flow.
2/Dechlorinated after 15 min.; grab sample - lab analysis.
3/Dechlorinated after 25 min.; grab sample - lab. analysis.
4/Dechlorinated after 36 min.; grab sample - lab. analysis.
5/Grab sample - field analysis.
6/Present as free chlorine; grab sample - field analysis.
7/Composite sample - field analysis.
* = Estimate
"<" = "less than"

Inspection results indicate the plant was operating efficiently with 70 percent TSS removal and 40 percent BOD_5 removal. The inability of the plant to meet BOD_5 and TSS permit limitations is at least partially due to hydraulic overloading. Additional contributing factors are sludge handling and digestion problems which will be discussed later.

The plant is designed for a peak flow of 1.5 MGD, a dry-weather flow of 0.45 MGD, and an annual average flow of 0.55 MGD. Due to difficulties encountered in monitoring the flow, we were unable to obtain a 24-hour totalizer flow from the STP; however, an 18-hour totalizer flow was obtained. Table 1 shows that the STP 18-hour totalizer flow was 27 percent below the 18-hour dipper totalizer flow. It is apparent that flows are being underestimated on the DMR's. The operator stated that the totalizer apparatus had not been calibrated for years due to the inability of the city to find a qualified technician to perform needed adjustments.

The Port Orchard STP serves a population of 4,620 with no major industrial contributions. The 24-hour average dipper flow was 0.68 MGD. Assuming 100 gal/day per capita, one would estimate a 24-hour average flow of 0.46 MGD. The actual 24-hour average flow is 32 percent higher than the predicted flow, contributing to hydraulically overloaded conditions. Infiltration and inflow problems add to this evident hydraulic overloading during the winter months.

The actual influent BOD_5 was 250 mg/L or 1,418 lbs/day. Assuming 0.2 lbs/day per capita, one would expect an organic loading of 924 lbs/day. The actual organic loading is 35 percent higher than the predicted loading. It is interesting to note that the hydraulic loading is 32 percent above the predicted hydraulic loading and organic loading is 35 percent higher than the predicted value. Both hydraulic and organic loadings are above the predicted loadings by approximately the same percentage. It may be that the STP is serving approximately 30 percent more individuals than is thought. We feel that this possibility warrents further investigation by the city.

As stated earlier, the Port Orchard STP is operating efficiently within its design limits with 70 percent TSS and 40 percent BOD_5 removal. The problems with meeting permit limits can not be expected to be totally solved through minor improvements and maintenance to the existing facility. The plant is not designed to handle the loadings it now receives.

Marine Data

The plant discharges into Sinclair Inlet (segment no. 07-15-03).

Grab samples were taken in the effluent plume and on the edge of the plume (Table 2). Table 4 lists the laboratory and field results from the marine grab samples. The only marine sample taken that showed any definite effect from the STP was one total chlorine residual of 0.2 mg/L taken within the plume. This marine grab sampling scheme was not intended to comprise a receiving water study. A detailed study on the effects of the Port Orchard STP on Sinclair Inlet is scheduled for early December 1980.

According to the "1980 Analysis of Receiving Water Segments" (L. Singleton), this segment has an overall water quality index (WQI) of 7.8. The WQI is based on ambient data collected from three monitoring stations.

Station Number	Temp.	Oxygen	pH	Bact.	Trophic	Aesthetics	NH_3-N	Index Rating
DYE 003	7.8	7.9	8.2	8.2	24.9	1.5	1.5	6.7
POD 006	9.8	9.7	8.8	8.8	17.5	0.0	1.3	4.7
SIN 001	7.6	12.9	8.4	8.4	25.1	2.1	2.2	12.0

Overall WQI = 7.8

Indices falling between 0-20 meet the goals of the Federal Water Pollution Control Act. Station SIN 001 is situated closest to the STP outfall and has the highest index rating in this segment. Figure 4 shows that station SIN 001 is situated between Port Orchard and Bremerton and is near the toe of Sinclair Inlet where marine exchange is low. These factors make it difficult to say, from ambient data, what effects the Port Orchard STP has on the water quality of Sinclair Inlet.

Laboratory Procedural Survey

Very few discrepancies were noted with laboratory procedures. A problem did exist with fecal coliform sampling. Plant procedures for fecal coliform sampling were to take a sample in an unsterilized container, wait 10 minutes, then pour the sample into a sterile bottle containing a sufficient amount of sodium thiosulfate. The sample was not iced during the 25-to-40-minute drive to the Central Kitsap laboratory where the samples are analyzed.

Table 5 is a mathematically produced graph of flow (MGD) versus detention time in the outfall pipe (minutes). It is recommended that the STP operator take detention time in the outfall pipe into account when dechlorinating the fecal coliform sample. The desired

Table 4. Marine Grab Sample Results.

Parameter	In Plume	Edge of Plume
Fecal Coliforms (col/100 ml)	<1	1 est.
TCR (mg/L)	.2*	0*
pH (S U.)	8.4	8.5
Sp. Cond. (μmhos/cm)	38,500	39,000
Turb. (NTU)	1	1
NH_3-N (mg/L)	<0.01	<0.01
NO_2-N (mg/L)	<0.01	<0.01
NO_3-N (mg/L)	0.04	0.04
Total Inorganic N	<0.06	<0.06
O-PO_4-P (mg/L)	0.06	0.05
Total Phos. P (mg/L)	0.11	0.10
Total Solids (mg/L)	46,000	33,000
TNVS (mg/L)	27,000	28,000
TSS (mg/L)	7	11
TNVSS (mg/L)	2	5
TOC (mg/L)	10	10
Salinity (ppt)	28.9	28.9
D.O. (mg/L)	15.2*	15.2*

All are from grab samples and lab analysis unless otherwise noted.

*Grab sample - field analysis.

"<" = "less than"

Fig. 4

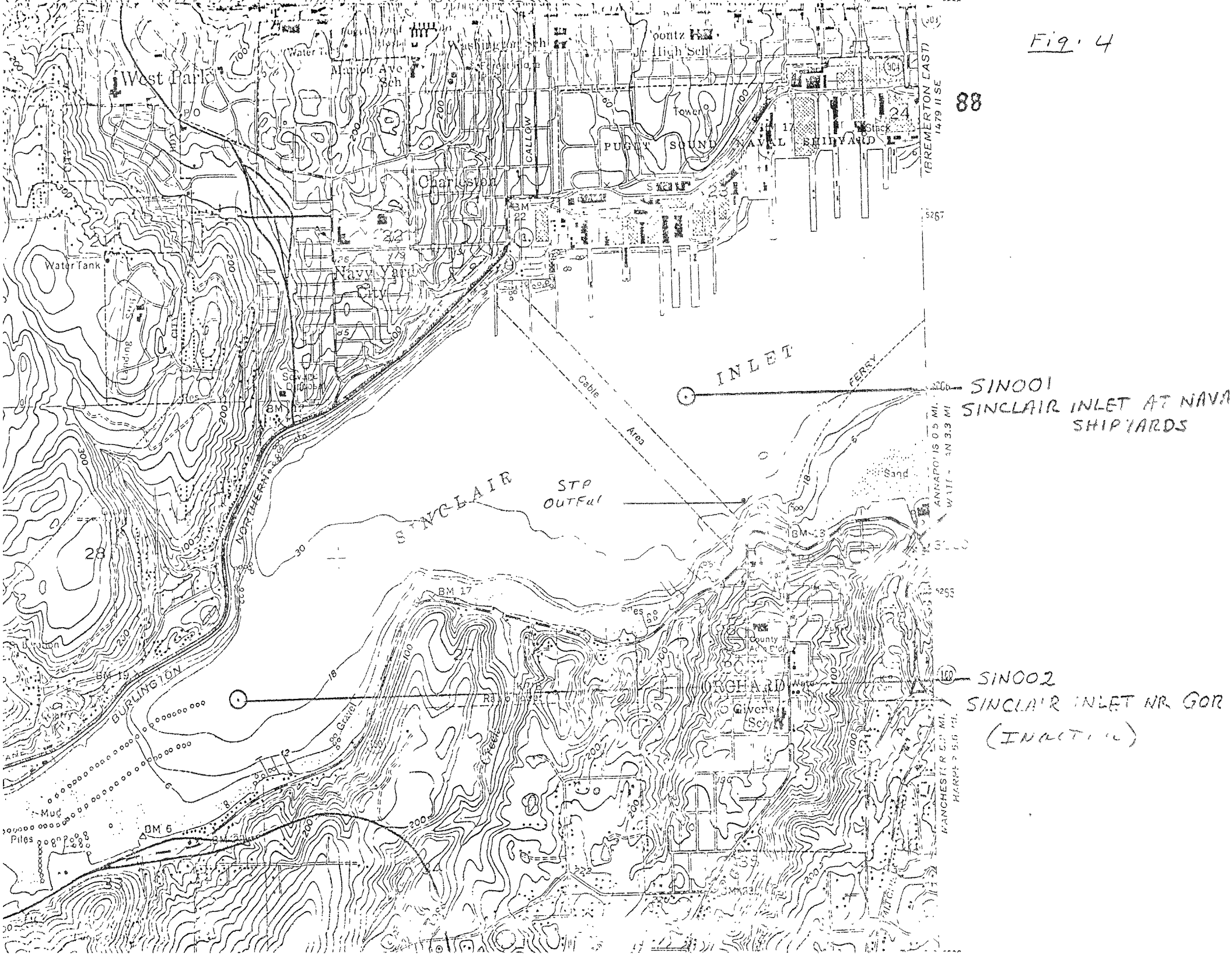
88
West Park
Marion Ave Sch
Washington Sch
Coontz Jr High Sch
PUGET SOUND NAVAL SHIPYARD
Charleston
Navy Yard City
Water Tank
Landing
Sewage Disposal
CALLOW
BREMERTON EAST
1479 II SE
INLET
FERRY
Cable Area
SINCLAIR
STP OUTFal
NORTHERN
BURLINGTON
ORCHARD
Givens Sch
County
Mud
Piles
Sand
SIN001
SINCLAIR INLET AT NAVA SHIPYARDS
SIN002
SINCLAIR INLET NR GOR
(INACTIVE)

Figure 5. Detention Time in Outfall Line

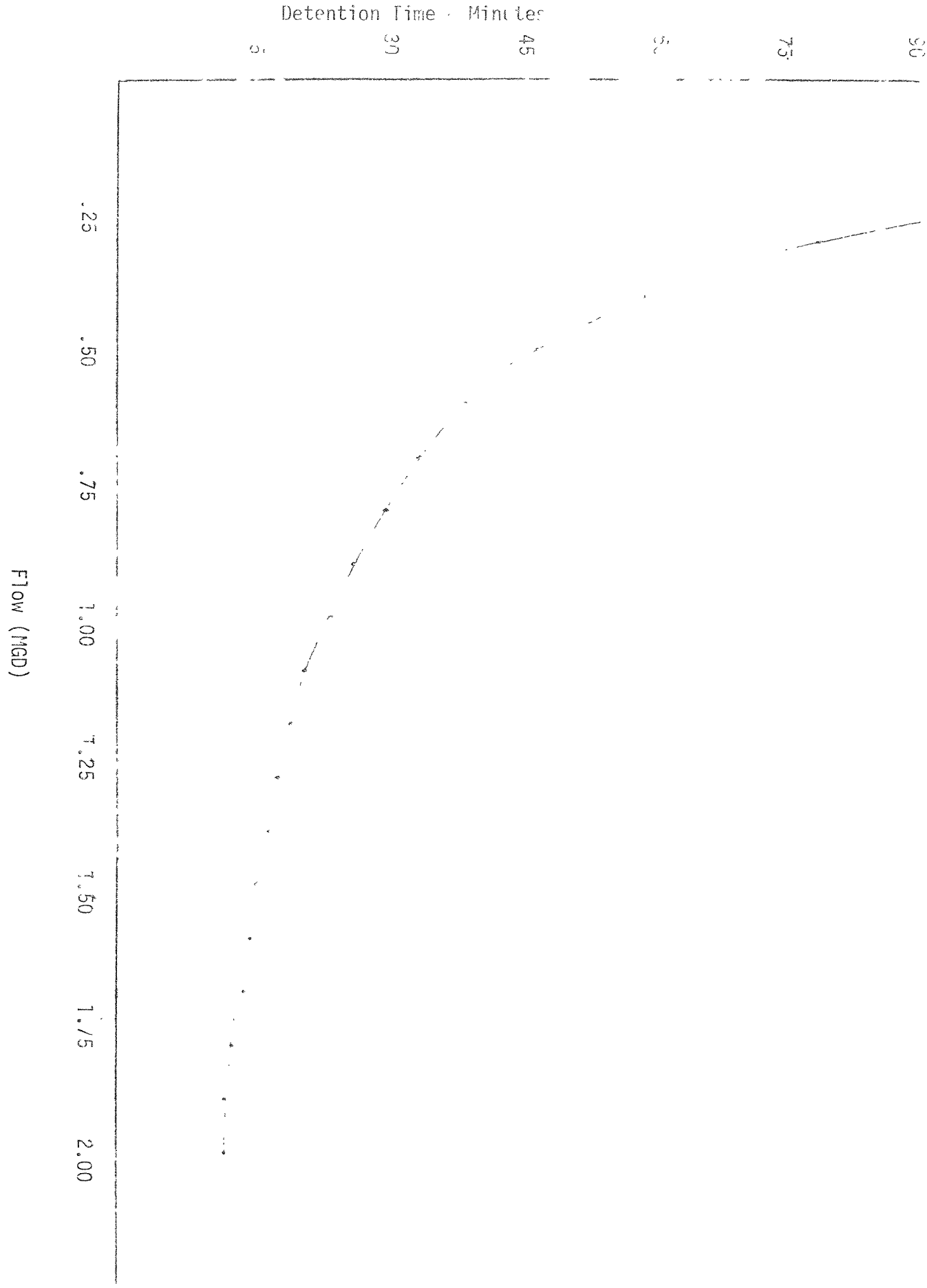

procedure for fecal coliform sampling and dechlorination is to take a sample in a sterile bottle, wait the allotted detention time period, then pour the sample into a sterile bottle containing a sufficient amount of sodium thiosulfate (1 ml per 4 oz. of sample). The sample should then be kept refrigerated or iced until analyzed.

Sludge:

Table 5 lists the results of metals analysis on sludge samples taken at the STP. Bill Yake has compiled and analyzed data on trace metals in sludge collected during Class II inspections. Table 6 is a summary of selected trace metals concentrations in digested sludge from primary treatment plants. The values from sludge trace metals analysis at the Port Orchard STP fall below the geometric mean for the metals listed in Table 6.

Table 5. Laboratory Results. Port Orchard STP Sludge Metals Analysis.

	Cu	Zn	Fe	Ni	Cr	Cd	Pb	Ag	Mn	Hg
Total (mg/kg)	162	610	4800	21	23	4.4	105	34	68	6.1
Soluble (mg/L)	0.12	17.0	76.0	0.64	<0.11	0.14	2.3	0.10	1.3	---

Table 6. Trace Metal Concentrations in Digested Sludge from Primary Treatment Plants.

	Cu	Cr	Cd	Pb	Zn	Ni
Number of Plants Sampled	11	11	11	11	11	7
Range (mg/kg dry wt)	160-1190	30-153	1.8-13	120-1090	770-2500	24-120
Geometric Mean (mg/kg dry wt)	466	51	7.4	372	1561	50
Geometric Mean ± 1 S.D. (mg/kg dry wt)	256-848	30-86	4.0-13.9	198-700	1045-2331	28-90

Approximately 5,000 gallons of sludge per week are wasted from the bottom of the clarifier. Mr. Dement states that sludge must be wasted weekly in order to keep it from bulking and to keep obnoxious odors at an acceptable level. Sludge should only need to be wasted every few months in this type of plant. One can only speculate as to why the sludge is bulking unless the clarifier can be

drained. Because sludge solids have been observed floating to the clarifier surface, it is highly probable that the cone has holes in it.

In order to pump sludge from the bottom of the clarifier, the sludge line must be purged to clear foreign objects that have fallen into the tank. Back-flushing the sludge line undoubtedly resuspends an unknown quantity of settled material with undesirable results.

Short of draining and cleaning the clarifier, which would require a bypass, we are not aware of any way of solving the sludge pumping problem. Until the sludge problem is solved, any appreciable improvement in effluent quality is unlikely.

Recommendations:

The following is a list of recommendations that we believe should be implemented immediately.

1. Use Figure 5 to determine detention time in the outfall line. Fecal coliform sample dechlorination and total chlorine residual should not be done until the detention time has passed. We are primarily interested in the quantity of the effluent when it reaches Sinclair Inlet. Accounting for detention time in the outfall is more representative of the true condition.

2. Laboratory procedures for analysis conducted at the Central Kitsap lab were found to be excellent. Very few discrepancies were noted between lab procedures and accepted standard methods. Recommendations found in the laboratory procedural survey form at the end of this report should be put into effect. Laboratory personnel appeared to be very receptive to these recommendations.

3. Comparison of 24-hour composite sample results split with the STP operator correlate very well with the exception of fecal coliforms (Table 3). It is recommended that correct fecal coliform collection procedures be implemented immediately. Additionally, 24-hour composite samplers should be purchased and installed on the influent and effluent as soon as possible.

4. The practice of washing grit into the effluent pipe should be haulted. It is recommended that grit be placed in garbage cans and wasted at the sludge disposal site if no other viable arrangements for wastage can be made.

5. The flow monitoring apparatus should be calibrated by a qualified techincian as soon as possible.

WA:cp

Attachments

REFERENCE

Leupold and Stevens, Inc.. Stevens Water Resources Data Book. 1st Edition, Leupold and Stevens, Inc., 159 pp.

Metcalf and Eddy, Inc., 1972. Wastewater Engineering. McGraw Hill, Inc., 446-447 pp.

Singleton, L.R., 1980. "Update of the 1980 Analysis of State Waterway Segments: Water Quality Index (WQI) Analysis." Memorandum to John Bernhardt, Water and Wastewater Monitoring Section, DOE, 14 pp.

Yake, W.E., "Trace Metals in Municipal Wastewater Systems." unpub. notes, 4 pp.