89-e14

Segment No. 01-01-07

WA-01-0010

INTALCO CLASS II INSPECTION
JULY 25-27, 1988

by
Marc Heffner

Washington State Department of Ecology
Environmental Investigations and Laboratory Services
Compliance Monitoring Section
Olympia, Washington 98504

September 1989

TABLE OF CONTENTS

Title	Page
ABSTRACT	1
INTRODUCTION	3
PROCEDURES	3
RESULTS AND DISCUSSION	
Flow Measurement	4
General Chemistry Results and NPDES Permit Limits Comparison	5
Priority Pollutants - Water	5
Bioassays - Water	6
Priority Pollutants - Sediments	6
Bioassays - Sediment	7
RECOMMENDATIONS AND CONCLUSIONS	
Flow Measurement	7
General Chemistry Results and Comparison to NPDES Permit Limits	7
Priority Pollutants - Water	8
Bioassays - Water	8
Priority Pollutants - Sediments	8
Bioassays - Sediment	8
REFERENCES	9
FIGURES	
Figure 1 - Location Map	11
Figure 2 - Sediment Sampling Locations	12
Figure 3 - 002 Outfall Weir Configuration	13
TABLES	
Table 1 - Priority Pollutant Cleaning and Field Transfer Blank Procedures	15
Table 2 - Samples Collected and Parameters Analyzed	16
Table 3 - Analytical Methods and Laboratories Used	17
Table 4 - Flow Measurements	18
Table 5 - General Chemistry Grab Sample Results	19
Table 6 - General Chemistry and Permit Metals Composite Samples Results	20
Table 7 - Inspection Results/NPDES Permit Comparison	21
Table 8 - Priority Pollutants Found in Water Samples	22
Table 9 - Water Bioassay Results	23
Table 10 - Parameters Found in Sediment Samples	26
Table 11 - Sediment Bioassay Results	27

TABLE OF CONTENTS (Continued)

Title	Page
APPENDICES	
Ecology Results of VOA, BNA, Pest/PCB and Metals Priority Pollutant Scans of Water Samples	29
Ecology Results of VOA, BNA, Pest/PCB and Metals Pollutant Scans of Sediment Samples	33

ABSTRACT

A Class II inspection was conducted at Intalco on July 25-27, 1988. Intalco is a large primary aluminum smelter near Ferndale, Washington, with two outfalls into the Strait of Georgia. Effluent and receiving water sediment samples were collected for general chemistry, priority pollutant, and bioassay analyses. Both discharges met permit limits. Very high concentrations of PAHs and PCBs were found in the sediments near the process wastewater (001) outfall. Some PAHs were also found in the 001 discharge.

INTRODUCTION

A Class II inspection was conducted at Intalco on July 25-27, 1988. Intalco is a large primary aluminum smelter located near Ferndale (Figure 1). The smelter discharges into the Strait of Georgia through two outfalls: 001 or SP-10 which discharges treated process wastewater, casthouse cooling water, and treated sanitary waste; and 002 or D-10 which discharges stormwater runoff and once through non-contact cooling water. An aerated lagoon treats sanitary wastes generated onsite. Discharge is limited by NPDES Permit No. WA-000295-0.

The inspection was conducted by Pat Hallinan and Marc Heffner of the Ecology Compliance Monitoring Section (CMS). Assisting from Ecology were Kelly Ryan of the Industrial Section and Norm Glenn of CMS. John Michaelson, Dave Leslie, and Dave Mendelsohn represented Intalco during the inspection. Intalco retained a consultant, ENSR, to monitor the inspection. Cari Rawlinson represented ENSR during the inspection.

Objectives of the inspection included:

- Assess NPDES permit limit compliance with independent sample collection and laboratory analysis.
- Assess the permittee's self-monitoring by reviewing laboratory, sampling, and flow measurement procedures; and splitting samples for Ecology and Intalco analysis.
- Characterize effluent and receiving water sediment toxicity with general chemistry analyses, priority pollutant scans, and bioassays.

PROCEDURES

Ecology sampling included both grab and composite samples. Ecology Isco priority pollutant composite samplers were set up to sample the 001 discharge near the effluent Parshall flume and the 002 discharge near the effluent Cipolletti weir. Approximately 180 mLs of sample were collected every 30 minutes for 24 hours. Sample collection jugs were iced to cool samples as they were collected. Accompanying hand composites, comprised of three grab samples, were collected for bioassay tests. Mechanical composites using Intalco equipment were considered for bioassay sample collection, but the sample volume required could not be cooled during collection so the idea was abandoned. The hand composite samples were refrigerated in an Intalco walk-in cooler between sampling times. Field quality assurance included special composite sampler cleaning prior to the inspection and collection of an on-site transfer blank sample (Table 1). Sampling times and parameters analyzed are included in Table 2.

Composite and grab samples were also collected by Intalco. The Intalco conventional composite samplers collected equal volumes of sample every 30 minutes for 24 hours. The samples were not cooled during collection. The exception was an aliquot of the 001 sample for Benzo(a)Pyrene analysis, which was routed into a separate cooled container. Intalco maintains continuous pH and temperature monitoring on both discharges. Sampling times and parameters analyzed are included in Table 2.

Sediment samples were collected using a 0.1 m2 van Veen grab sampler following Puget Sound Protocols (Tetra Tech, 1986). Four sites were sampled as noted in Figure 2; one near outfall 001, one near outfall 002, a sample to estimate background conditions, and a recheck of an area where high cyanide and fluoride concentrations were found in 1987 (Rensel, 1987). At each station grab samples were collected until an adequate sample was available for all analyses. Only the top two centimeters of sediment were used from each grab. A bottle for volatile organic (VOA) analysis was filled directly from the sampler; one-half from each of the first two grabs. The remainder of the top two centimeters was composited using priority pollutant cleaned stainless steel equipment (Table 1). The composite was stirred until homogenous and placed in appropriate containers. Sampling times and parameters analyzed are summarized in Table 2.

All samples were split for analysis by Ecology and Intalco. Samples for analysis by Ecology were placed on ice and shipped to the Ecology/EPA Laboratory in Manchester. Ecology analytical methods are summarized in Table 3.

Intalco routinely measures flow of both the 001 and 002 discharges. The 001 flow is measured at a 24-inch Parshall flume and the 002 flow is measured at a four-foot Cipolletti weir. Ecology instantaneous flow measurements were made at both discharges.

RESULTS AND DISCUSSION

Laboratory procedures were reviewed by Kelly Ryan. Issues related to techniques used were handled by Kelly outside the scope of the inspection report. Sample splitting was extensive, so both Ecology and Intalco laboratory results are presented on most tables. Table 3 includes a summary of the laboratories performing analysis for Ecology and Intalco.

Flow Measurement

The Ecology instantaneous measurements and Intalco plant meter measurements agreed closely for the 001 discharge (Table 4). The Parshall flume was slightly narrower than standard specifications (23.5 inches compared to the standard 24 inches), but this is not considered a problem.

The accuracy of Intalco 002 discharge inspection flow measurements could not be assessed (Heffner, 1988). The measurement structure is designed for stormwater flows rather than the relatively small dry weather flow that occurred during the inspection (Table 4) . A minimum head of 0.2 feet is recommended for a Cipolletti weir (Isco, 1985). Head heights during the inspection ranged from 0.11-0.15 feet. Thus, accurate low flow measurements would require weir modification. Figure 3 includes the recommended configuration of a Cipolletti weir along with the field measurements. Although the height of the weir above the channel bottom is less than the 2HMax recommendation, it does meet the absolute minimum criteria of one foot (Isco, 1985).

General Chemistry Results and NPDES Permit Limits Comparison

General chemistry and permit metals results are presented in Table 5 (Grab Samples) and Table 6 (Composite Samples). Both discharges had near neutral pH and low nutrient concentrations. The Intalco continuous pH and temperature monitors compared acceptably with the Ecology grab sample results.

The chlorine residual concentration was < 0.1 mg/L in 002, but was detected at 0.1 mg/L in one of the 001 samples. The sanitary waste treatment lagoon effluent is chlorinated at fairly high concentrations, 2.0-3.0 mg/L total chlorine residual, possibly accounting for the chlorine detected in the 001 discharge. The lagoon effluent coliform counts were all < 1 organism/100 mLs, suggesting that excess chlorine was being used. Attempts to reduce the chlorine residual while maintaining low fecal coliform counts should be made. A residual of 0.5 mg/L or less usually provides adequate disinfection. Intalco was checking only free chlorine; comparison with Ecology results was poor. The age of the Intalco test kit chemicals was unknown, so replacement with fresh chemicals was suggested (Heffner, 1988). Also, measurement of total chlorine residual is appropriate.

The 001 discharge met most permit parameters (Table 7). TSS measurements from the Intalco sampler were above the Daily Average Limit. Aluminum effluent loads were greater than the daily maximum, but allowance is made in the permit to deduct the intake water load prior to comparison with the permit. Water purchased for plant use has been treated with alum. The intake concentration was not measured during the inspection, but Intalco reported that the concentration usually varies between 400-1400 ug/L, roughly the same range as the inspection effluent samples (600-1300 ug/L). Thus actual permit violation was unlikely. As with the TSS samples, higher Al concentrations were found in the Intalco sampler. Inspection of the sampler intake location and review of cleaning procedures may be useful.

The 002 discharge is primarily for stormwater. Flow was low during the dry weather inspection sampling and the discharge was within permit limits (Table 7). Parameters measured were generally at low concentrations, although some fluoride and fecal coliforms were found in the discharge.

Priority Pollutants - Water

Table 8 summarizes the priority pollutants found in the water samples. Parameters analyzed and detection limits for the Ecology analysis are included in the Appendix.

Four VOA compounds were found at low concentrations in the samples. The same compounds were also found in the field and/or method blank. Thus, the VOAs detected were likely due to field or laboratory contamination.

Several polynuclear aromatic hydrocarbons (PAHs) were found in the 001 discharge. Similar parameter lists were detected by Ecology (ARI) and Intalco (Laucks), although the Intalco result concentrations were two to five times greater than the Ecology results. Phenanthrene, Fluoranthrene, and Pyrene were found in the highest concentrations by Ecology and Intalco (Table 8). Benzo(a)Pyrene, the parameter included in the NPDES Permit as an indicator of

PAH contamination, was not detected. Permit monitoring for the PAHs detected during the inspection may be useful.

Several metals were also found at low concentrations.

Also included on Table 8 is a summary of State Water Quality Standards Toxicity Criteria (Ecology, 1988c: EPA, 1986b). All parameters were below criteria with the possible exception of cyanide. One of the grab samples had a reported concentration of 2 ug/L, which is slightly more than the saltwater acute and chronic criteria of 1 ug/L.

Bioassays - Water

Two freshwater organism tests, *Daphnia* and trout, and two saltwater organism tests, Pacific oyster larvae and echinoderm (sand dollar), were conducted. The samples were also used by the Ecology laboratory to test a modified feeding procedure for *Ceriodaphnia*, an additional freshwater test. Although standard protocols were modified, the *Ceriodaphnia* results are included for comparison. Effluent bioassay results are summarized in Table 9.

The freshwater organisms indicated no acute toxicity at the 100 percent effluent concentration due to either discharge. *Ceriodaphnia* reproduction results suggest possible inhibition due to the 001 effluent and possible enhancement due to the 002 effluent.

The saltwater tests required dilution of the effluents with saltwater to provide enough salinity for the test organisms. The oyster larve test was run with a maximum of 40 percent effluent by Ecology and 32 percent effluent by Intalco (EVS). Mortality due to the effluents was not significant. Increased abnormalities were observed in the 001 sample by Ecology and Intalco laboratories, with the EC50 estimated to be 26 percent by Ecology and 27.8 percent by Intalco.

Echinoderm test concentrations were set up to a maximum of 50 percent effluent. Fertilization rates greater than 50 percent were not achieved in either the Ecology or Intalco (EVS) salinity control dilutions greater than 12.5 percent. Fertilization in the Intalco test was less than in the Ecology test. No significant toxic response in excess of the saltwater control was noted in the Ecology 001 and 002 effluent tests. A reduction in fertilization was observed in excess of the salinity control in the Intalco 002 effluent test.

Priority Pollutants - Sediments

Table 10 summarizes the priority pollutants found and other parameters analyzed in the sediment samples. Sampling station locations are identified in Figure 2. Parameters analyzed and detection limits for the Ecology analysis are included in the Appendix.

Analytes found in the sediments included PAHs, PCBs (polychlorinated biphenyls), and metals. As with the water samples, the Ecology (ARI) and Intalco (Laucks) laboratories found similar pollutants, with the Intalco results roughly one to four times the Ecology results.

Very high concentrations of several PAHs and PCB Aroclor-1242 were found in the sediments near the 001 outfall. The three PAHs found in the highest concentrations in the sediment,

Fluoranthrene, Phenanthrene, and Pyrene, were also found in the highest concentrations in the 001 effluent samples. It is unclear if the present discharge concentrations could account for the observed sediment concentrations. PCBs, numerous PAHs, and two metals exceeded the proposed AET criteria for sediments (Ecology, 1988b). The sediment concentrations exceeded the proposed AET by more than 100 times for several of the PAHs and PCB Aroclor-1242.

Many of the same compounds were found at lower concentrations at the other sites. The LAET and ACR NOEC criteria were exceeded for PCBs in the sediments collected near outfall 002. The ACR NOEC criteria were exceeded for Cr and/or Ni in the 002, background, and recheck samples.

Cyanide concentrations at the recheck station were < 0.15 mg/Kg-dry wt, much less than the 88-110 mg/Kg-dry wt reported in 1987 (Rensel, 1987). The 1987 samples were cores, with only general descriptions of station locations. The Class II sample was of the top two centimeters at a location fitting the general description provided.

Bioassays - Sediment

An amphipod bioassay (*Rhepoxynius abronius*) was run on each of the four inspection sediments and a control sediment (Table 11). The control sediment was collected along with the test amphipods. Proposed Ecology sediment criteria establish survival greater than 75 percent or greater than survival at an approved reference station, whichever is less, as a passed bioassay (Ecology, 1988b). Reference station data were not collected during the inspection, thus, 75 percent survival is used as a guideline for results interpretation. On this basis, all Ecology (Invert Aid) results would indicate a passed bioassay. The Intalco (EVS) results would be considered passing except for the 001 sediment. Comparison of the chemical data to the AETs suggests that bioassay failure by the 001 sediment would be expected.

RECOMMENDATIONS AND CONCLUSIONS

Flow Measurement

The 001 outfall flow meter appeared to be measuring accurately during the inspection.

The 002 outfall weir was designed for stormwater flow measurement. The configuration looked appropriate, but the dry weather inspection flow was below the minimum level of accuracy.

General Chemistry Results and Comparison to NPDES Permit Limits

The discharges were within permit limits during the inspection. The aluminum limit could not be completely evaluated because the intake load was not measured. Collection of an intake sample for aluminum analysis is recommended for the next inspection.

Chlorination of the treated sanitary wastes was of some concern:

1. The lagoon effluent had a fairly high total chlorine residual, 2.0-3.0 mg/L. Generally, a chlorine residual of 0.5 mg/L or less provides adequate disinfection. The residual should be reduced to the minimum necessary for disinfection.

2. Intalco was testing only free chlorine residual with chemicals of unknown age. Fresh chemicals and measurement of total chlorine residual are recommended.

The sample split from the Intalco 001 sampler appeared to have higher concentrations of TSS and Al than the similar Ecology sample. Inspection of the 001 sampler to assure an unbiased sample is recommended.

Priority Pollutants - Water

Several PAHs were found in the 001 effluent sample. Those found did not include Benzo(a)Pyrene, the PAH limited by the NPDES permit. Re-evaluation of Benzo(a)Pyrene as a suitable indicator of PAH contamination is recommended. Permit monitoring for those PAHs found in the effluent and/or sediment during the inspection may prove more useful.

Bioassays - Water

No acute toxicity was observed in the effluent samples. Minimal chronic effects were possibly observed in the 001 effluent sample *Ceriodaphnia* and Pacific oyster larvae bioassays.

Priority Pollutants - Sediments

Sediments near the 001 outfall had PAH and PCB concentrations greatly exceeding AETs. The three compounds found at the highest concentrations in the 001 sediment were also found in the highest concentrations in the 001 effluent. Many of the same compounds were found in the other inspection sediments, but generally below AET concentrations.

The high concentrations observed near the 001 outfall warrant further investigation. Defining the extent of the highly contaminated area is the recommended first step.

Bioassays - Sediments

Ecology bioassays resulted in greater than 75 percent *Rhepoxynius* survival for all the sediments tested. Intalco bioassay survival was greater than 75 percent in all sediments except near the 001 outfall, which had only 53 percent survival. Based on comparison of the chemical data to the AETs, less than 75 percent survival would be expected in the 001 sediment.

REFERENCES

REFERENCES

APHA-AWWA-WPCF, 1985, Standard Methods for the Examination of Water and Wastewater, 16th ed.

ASTM, 1980, Standard Practice for Conducting Static Acute Toxicity Tests With Larvae of Four Species of Bivalve Mollusks, ASTM Designation E724-80. Ecology, 1981, Static Acute Fish Toxicity Test, DOE 80-12, revised July 1981.

Ecology, 1988a, Department of Ecology Laboratory Users Manual.

Ecology, 1988b, Chapter 173-204 WAC - Sediment Quality Standards (Draft dated July 31, 1988).

Ecology, 1988c, Chapter 173-201 WAC - Water Quality Standards for Surface Waters of the State of Washington, January 6, 1988.

EPA, 1983, Methods for Chemical Analysis of Water and Wastes, 600/4/79-020, revised March 1983.

EPA, 1984, 40 CFR Part 136, October 26, 1984. EPA, 1985a, Methods for Measuring the Acute Toxicity of Effluents to Freshwater and Marine Organisms, EPA/600/4-85/013.

EPA, 1985b, Short Term Methods for Estimating the Chronic Toxicity of Effluents and Receiving Waters to Freshwater Organisms, EPA/600/4-85/014.

EPA, 1986a, Test Methods for Evaluating Solid Waste Physical/Chemical Methods, SW-846, 3rd ed., November 1986.

EPA, 1986b, Quality Criteria for Water, EPA 440/5-86-001. EPA, 1987, A Short-Term Chronic Toxicity Test Using *Daphnia magna*, EPA/600/D-87/080.

Heffner, M., 1988, Intalco Class II Inspection Field Data Summary, August 3, 1988 memo to K. Ryan.

Isco, Inc., 1985, Isco Open Channel Flow Measurement Handbook, 2nd ed. Rensel, J., 1987, Letter from Rensel Associates, Aquatic Sciences Consultants, received by Ecology on October 8, 1987.

Tetra Tech, 1986, Recommended Protocols for Measuring Selected Environmental Variables in Puget Sound, Prepared for Puget Sound Estuary Program.

FIGURES

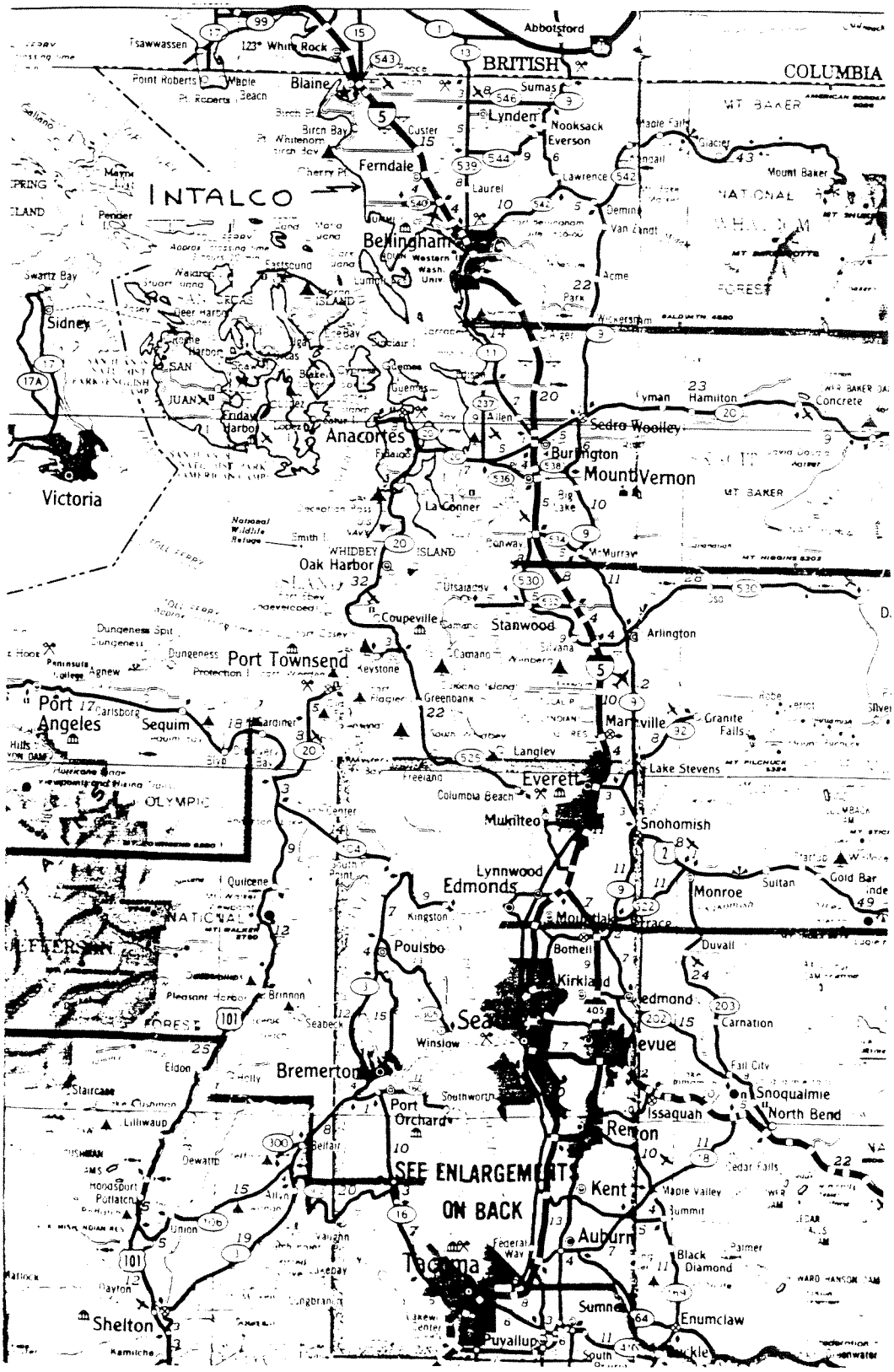

Figure 1 - Location Map - Intalco, July 1988

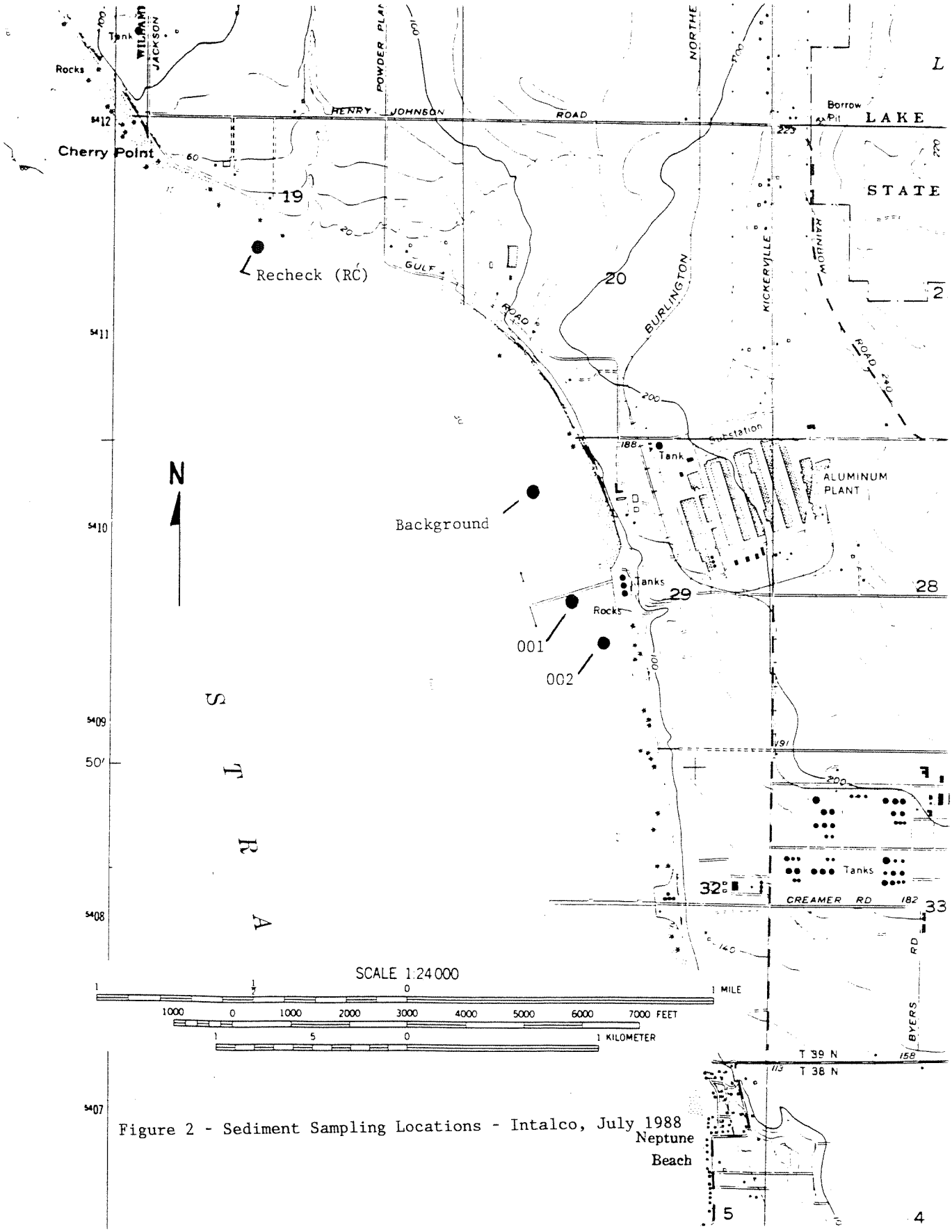

Figure 2 - Sediment Sampling Locations - Intalco, July 1988

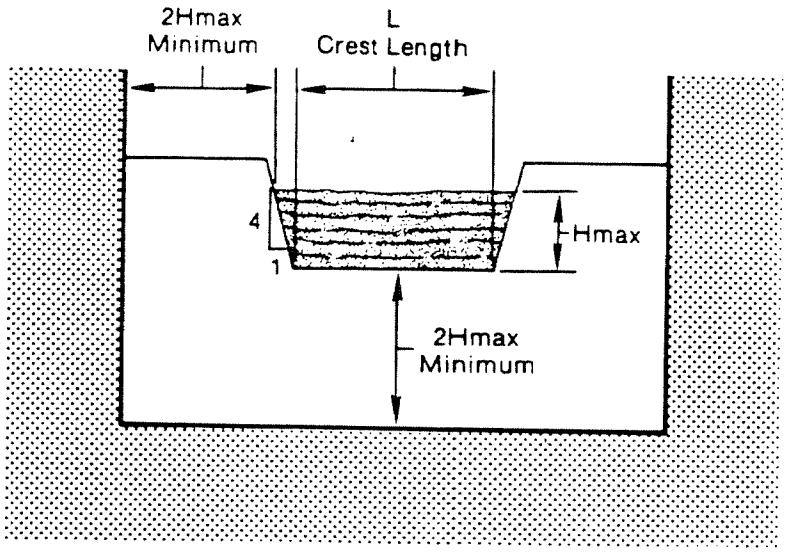

FIGURE 3.1-5: TRAPEZOIDAL [CIPOLLETTI]
SHARP-CRESTED WEIR

Standard Cipolletti Weir Configuration (Isco, 1985)

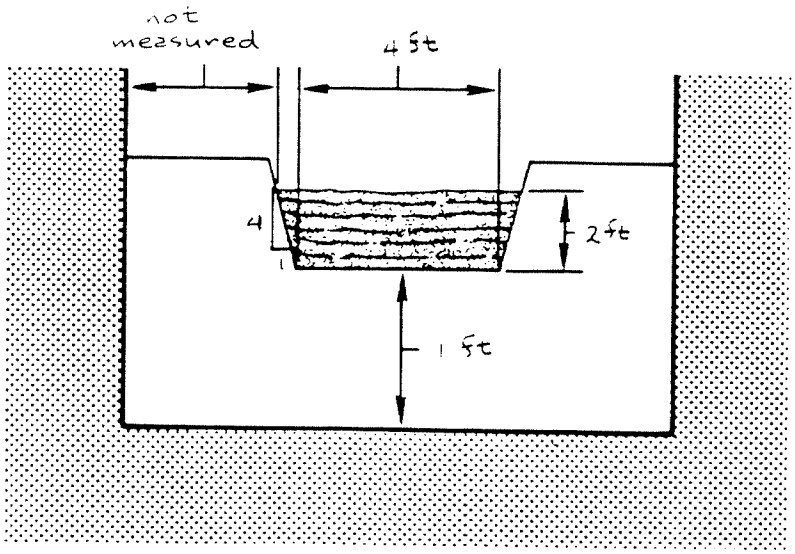

Intalco Configuration

Figure 3 - 002 Outfall Weir Configuration - Intalco, July 1988

TABLES

Table 1 - Priority Pollutant Cleaning and Field Transfer Blank Procedures - Intalco, July 1988

PRIORITY POLLUTANT SAMPLING EQUIPMENT CLEANING PROCEDURES

1. Wash with laboratory detergent
2. Rinse several times with tap water
3. Rinse with 10 percent HNO_3 solution
4. Rinse three (3) times with distilled/deionized water
5. Rinse with high purity methylene chloride
6. Rinse with high purity acetone
7. Allow to dry and seal with aluminum foil

FIELD TRANSFER BLANK PROCEDURE

1. Pour organic free water directly into appropriate bottles for parameters to be analyzed from grab samples (VOA).

2. Run approximately 1L of organic free water through a compositor and discard.

3. Run approximately 6L of organic free water through the same compositor and put the water into appropriate bottles for parameters to be analyzed from composite samples (BNA, Pesticide/PCB, and metals).

Table 2 - Samples Collected and Parameters Analyzed - Intalco, July 1988

Composite Samples

Sample	Sampler	Date	Time	Cond	Fluoride	NH3-N	NO_2+NO_3-N	Total-P	TSS	Hardness	ABN	PEST/PCB	pp Metals	Al	Ni	Sb	Bioassays: Trout	Bioassays: Oyster Larvae	Bioassays: Echino-derm ++	Bioassays: Daphnia
001	Eco	7/26-27	1030-1030	E I	E I	E I	E I	E	E I	E	E I	E I	E I	E I						
	Int	7/26-27	1030-1030	E	E I				E I	E				E I	E I	E I				
	Eco-Int	7/26-27	*	E I	E I				E I								E I	E I	E I	E I
002	Eco	7/26-27	0940-0940	E I	E I	E I	E I	E	E I	E	E I	E I	E I	E I						
	Int	7/26-27	0940-0940	E	E I				E I	E				E I	E I	E I				
	Eco-Int	7/26-27	**	E I	E I				E I								E I	E I	E I	E I
Blank	Eco	7/26	0845+								E	E	E							

Grab Samples

Sample	Date	Time	Field Analyses: Temp	Field Analyses: pH	Field Analyses: Cond	Field Analyses: Chlorine residual Free	Field Analyses: Chlorine residual Total	Laboratory Analyses: F. coli	Laboratory Analyses: Cond	Laboratory Analyses: Cyanide	Laboratory Analyses: Oil & Grease	Laboratory Analyses: VOA
001	7/26	1600	E I	E I	E	E I	E		E I	E I	E I	E I
	7/27	0955	E I	E I	E	E I	E	E	E I	E I	E I	E
		1135						E				
002	7/26	1625	E I	E I	E	E I	E		E I	E I	E I	E I
	7/27	0855	E I	E I	E	E I	E	E	E I	E I	E I	E
		1145						E				
Lagoon	7/26	1635				E I	E					
	7/27	0935				E I	E I	E I				
		1150						E I				
Blank	7/26	0845+										E

Sediment Samples

Sample	Date	Time	Depth (ft)	No. of Grabs	Fluoride	Cyanide	VOA	% Solids	ABN	PEST/PCB	pp Metals	Al	TOC	Grain Size	Rhepox. Bioassay
Background	7/27	1425-1505	28-32	4	E I	E I	E I	E I	E I	E I	E I	E I	E I	E I	E I
001	7/25	1750-1835	38	4	E I	E I	E I	E I	E I	E I	E I	E I	E I	E I	E I
002	7/25	1600-1710	14-18	5	E I	E I	E I	E I	E I	E I	E I	E I	E I	E I	E I
Re-check	7/27	1535-1720	21-31	6	E I	E I	E I	E I	E I	E I	E I	E I	E I	E I	E I

* - Equal volumes collected at 1200 on 7/26, at 1725 on 7/26, and at 0955 on 7/27.
** - Equal volumes collected at 1215 on 7/26, at 1715 on 7/26, and at 0845 on 7/27.
\+ - Blank water run through composite sampler for ABN, pesticide/PCB and metals analysis.
Blank water poured directly into sample bottle for VOA analysis.
++ - Sand dollar and sea urchin tests were requested
E - Ecology laboratory analysis
I - Intalco laboratory analysis

Table 3. Analytical Methods and Laboratories Used - Intalco, July 1988

Laboratory Analyses	Method Used for Ecology Analysis (Ecology, 1988a)	Laboratory Performing Analysis: Ecology Results	Laboratory Performing Analysis: Intalco Results
Conductivity	APHA, 1985: #205	Ecology	Intalco
Hardness	APHA, 1985: #314B	Ecology	
Fluoride	APHA, 1985: #413E	Ecology	Intalco
NH_3-N	EPA, 1983: #350.1	Ecology	Laucks
NO_2+NO_3-N	EPA, 1983: #353.2	Ecology	Laucks
Total-P	EPA, 1983: #365.1	Ecology	
TSS	APHA, 1985: #209C	Ecology	Intalco
% Solids	APHA, 1985: #209F	Ecova	Laucks
Grain Size	Tetra Tech, 1986	Laucks	Laucks
TOC	APHA, 1985: #505	Ecova	Laucks
Fecal coliform	APHA, 1985: #909C	Ecology	Intalco
Oil and Grease	EPA, 1983: #413.1	Ecology	Intalco
Cyanide	EPA, 1983: #335.2-1	Ecology	Intalco
VOA (water)	EPA, 1984: #624	ARI	Laucks
VOA (solids)	EPA, 1986a: #8240	ARI	Laucks
ABN (water)	EPA, 1984: #625	ARI	Laucks
ABN (solids)	EPA, 1986a: #8270	ARI	Laucks
Pest/PCB (water)	EPA, 1984: #608	ARI	Laucks
Pest/PCB (solids)	EPA, 1986a: #8080	ARI	Laucks
Metals	EPA, 1983: #200 series	Ecology	Laucks*
Salmonid (Trout)	Ecology, 1981	Ecology	EVS
Daphnia magna	EPA, 1987		EVS
Daphnia pulex	EPA, 1985a	Ecology	
Ceriodaphnia dubia	EPA, 1985b	Ecology	
Echinoderm	Dinnel, et al., 1987	Ecology	EVS
Bivalve Larvae	ASTM, 1980	Ecology	EVS
Rhepoxynius	Tetra Tech, 1986	Invert-Aid	EVS

Field Analyses

pH	APHA, 1985: #423
Conductivity	APHA, 1985: #205
Temperature	APHA, 1985: #212
Chlorine Residual	APHA, 1985: #408E

* - Al, Ni, and Sb analyzed by Intalco
ARI - Analytical Resources Incorporated

Table 4 - Flow Measurements - Intalco, July 1988

001 Outfall

Date			Instantaneous Flow (MGD)		Total-izer reading	Flow for time increment (MGD)
Month	Day	Time	Ecology	Intalco		
7	26	1540	5.8	5.7	793464	
						6.0
7	27	1015	6.0	5.8	795211	

Average flow during inspection = 6.0 MGD

002 Outfall

Date			Instantaneous Flow (MGD)		Total-izer reading	Flow for time increment (MGD)
Month	Day	Time	Ecology	Intalco		
7	26	925	0.48	0.55	159692	
						0.64
7	26	1625	0.38	0.60	159763	
						0.52
7	27	900	0.34	0.47	159899	

Average flow during inspection = 0.56 MGD

Table 5 - General Chemistry Grab Sample Results - Intalco, July 1988

				Field Analyses					Laboratory Analyses			
							Chlorine res. (mg/L)					
Sample	Date	Time	Lab	Temp + (C)	pH + (S.U.)	Cond (umhos/cm)	Free	Total	F. coli (#/100/mL)	Cond (umhos/cm)	Cyanide (ug/L)	Oil & Grease (mg/L)
001	7/26	1600	Eco	23.2	7.1 *	250	<0.1	<0.1		241	2U	3
			Int	23.0	7.6		0.1			202	5U	0
	7/27	0955	Eco	22.8	7.4	255	<0.1	0.1	1U	276	2	2
			Int	22.0	7.6		0.1			206	5U	1
		1135	Eco						1U			
002	7/26	1625	Eco	24.8	6.9 *	110	<0.1	<0.1		136	2U	1
			Int	24.0	7.3		<0.1			119	5U	0
	7/27	0855	Eco	20.5	7.0	120	<0.1	<0.1	510	134	2U	1U
			Int	20.8	7.2		<0.1			120	5U	1
		1145	Eco						69			
Lagoon	7/26	1635	Eco				3.0	3.0				
			Int				0.4					
	7/27	0935	Eco				2.0	3.0	1U			
			Int				0.4	1.7 **	1U			
		1150	Eco						1U			
			Int						1U			

\+ - Intalco Temp and pH measurements taken from the in-line meters.
* - Ecology pH meter was drifting.
** - Intalco personnel unsure of total chlorine residual procedure.
U - less than

Table 6 - General Chemistry and Permit Metals Composite Sample Results - Intalco, July 1988

Sample	Sampler	Laboratory	Date	Time	Cond (umhos/cm)	Fluoride (mg/L)	NH3-N (mg/L)	NO_2+NO_3-N (mg/L)	Total-P (mg/L)	TSS (mg/L)	Hardness (mg/L as CaCO3)	Al (ug/L)	Ni (ug/L)	Sb (ug/L)
001	Eco	Eco	7/26-27	1030-1030	236	0.36	0.01	0.19	0.05	7	62	801	10U	6
		Int			221	0.55	0.04	0.23		9.5		600	5	5U
	Int	Eco	7/26-27	1030-1030	237	0.42				14	63	1060	11	2U
		Int				0.50				21		1300	4	5U
	Eco-Int	Eco	7/26-27	*	236	0.43				9				
		Int			209	0.63				8.2				
002	Eco	Eco	7/26-27	0940-0940	139	2.5	0.01	0.03	0.01U	1	49	282	10U	2U
		Int			118	2.9	0.04	0.06		1.7		300	3	5U
	Int	Eco	7/26-27	0940-0940	137	2.8				2	52	453	8	2U
		Int				3.1				3.4		400	3	5U
	Eco-Int	Eco	7/26-27	**	136	2.4				2				
		Int			118	2.7				0.9				

* - Equal volumes collected at 1200 on 7/26, at 1725 on 7/26, and at 0955 on 7/27.
** - Equal volumes collected at 1215 on 7/26, at 1715 on 2/26, and at 0845 on 2/27.
U - less than

Table 7 - Inspection Results/NPDES Permit Comparison - Intalco, July 1988

		001 - Process Wastewater						002 - Stormwater				
		NPDES Permit Limits		Ecology Sample		Intalco Sample		NPDES Permit Limits	Ecology Sample		Intalco Sample	
Parameter	Units	Daily Average	Daily Maximum	Ecology Analysis	Intalco Analysis	Ecology Analysis	Intalco Analysis	Daily Maximum	Ecology Analysis	Intalco Analysis	Ecology Analysis	Intalco Analysis
Benzo(a)pyrene	(lbs/D)		0.17**	0.15 U	0.20 U		0.12		0.0	0.0		0.0
	(ug/L)			3 U	4 U	--	2.3 +		3 U	5 U	--	--
Antimony	(lbs/D)	4.3	9.6	0.3	0.3 U	0.1 U	0.3 U		0.0	0.0	0.0	0.0
	(ug/L)			6	5 U	2 U	5 U		2 U	5 U	2 U	5 U
Nickel	(lbs/D)	1.8	2.7	0.5 U	0.3	0.6	0.2		0.0	0.0	0.0	0.0
	(ug/L)			10 U	5	11	4		10 U	3	8	3
Aluminum	(lbs/D)	14 *+	30 *+	40 ++	30 ++	53 ++	65 ++	monitor	1.3	1.4	2.1	1.9
	(ug/L)			801	600	1060	1300		282	300	453	400
Flouride	(lbs/D)	130	300	18	28	21	25	monitor	11.7	13.5	13.1	14.5
	(mg/L)			0.36	0.55	0.42	0.50		2.5	2.9	2.8	3.1
TSS	(lbs/D)	650	1300	350	475	701 ++	1051 ++	monitor	4.7	7.9	9.3	15.9
	(mg/L)			7	9.5	14	21		1	1.7	2	3.4
Cyanide	(lbs/D)	5.2	11.6	0.1U; 0.1			0.3U; 0.3U		0.0; 0.0			0.0; 0.0
	(ug/L)			2U; 2			5U; 5U	100	2U; 2U			5U; 5U
Oil and Grease	(lbs/D)	200		150; 100			0; 50		4.7; 4.7U			0.0; 4.7
	(mg/L)		15 *	3; 2			0; 1	15	1; 1U			0; 1
Fecal Coliform	(#/100mL)	200	400	1U; 1U					510; 69			
pH	(S.U.)	within the range of 6.0 - 9.0		7.1; 7.4			7.6; 7.6	within 6.0 - 9.0	6.9; 7.0			7.3; 7.2
Temperature	(F)	--	--									
	(C)			23.2; 22.8			23.0; 22.0		24.8; 20.5			24.0; 20.8
Flow	(MGD)	--	--	6.0				monitor	0.56			
Production	(tons/day)	--	--				811					

* - shall not exceed 10 mg/L more than 3 times per month

** - during the inspection Order No. DE 88-198 was in effect increasing the Benzo(a)pyrene limit to 1.1 lbs/D

U - less than

*+ - correction for Al in intake water allowed. Intalco reports that usual intake water concentration is 400-1400 ug/L. Values in table are not corrected.

\+ - analysis by Intalco. All other analyses as described in Table 3.

++ - permit limit exceeded

Table 8 - Priority Pollutants Found in Water Samples - Intalco, July 1988

Sample:	Outfall 001			Outfall 002			Field Blank		Method Blank **			Toxicity Criteria (Ecology, 1988c) (EPA, 1986b)			
												Freshwater		Saltwater	
Lab:	Ecology	Ecology	Intalco	Ecology	Ecology	Intalco	Ecology	Intalco	Ecology	Ecology	Intalco	Acute	Chronic	Acute	Chronic
Lab Log #:	318084	318085		318087	318088		318096								
Type:	Grab	Grab	Grab	Grab	Grab	Grab			MB804	MB801					
Date:	7/26	7/27	7/26	7/26	7/27	7/26	7/26								
Time:	1600	0955	1600	1625	0855	1625									
-----VOA Compounds (ug/L)															
Methylene Chloride	10 B	14 B	13	6.1 B	4.4 B	1 U	18 B	1 U	6.8	1.6	1 U				
Acetone	10	38	10	0.6 U	0.6 U	5 U	11	28	0.6 U	0.6 U	5 U				
Chloroform	4.3	4.3	3	1.6	1.4	1	1.3	1 U	0.9 U	0.9 U	1 U	28900 *	1240 *		
2-Butanone	1.0 U	5.8 B	3 U	1.0 U	1.0 U	3 U	1.0 U	5	12	1.0 U	3 U				
Cyanide (ug/L)	2 U	2	5 U	2 U	2 U	5 U						22	5.2	1	1

Sample:	001 Outfall		002 Outfall		Field Blank	Method Blank						
Lab:	Ecology	Intalco	Ecology	Intalco	Ecology	Ecology	Intalco					
Lab Log #:	318080		318082		318096							
Type:	ECO-Comp	ECO-Comp	ECO-Comp	ECO-Comp								
Date:	7/26-27	7/26-27	7/26-27	7/26-27	7/26							
-----ABN Compounds (ug/L)												
PAHs												
Acenaphthene	3	6	3 U	2 U	2 U	2 U	2 U	1700 *	520 *	970 *	710 *	
Fluorene	1 M	3	3 U	2 U	2 U	2 U	2 U					
Phenanthrene	15	30	3 U	2 U	2 U	2 U	2 U					
Fluoranthene	8	24	3 U	2 U	2 U	2 U	2 U	3980 *		40 *	16 *	
Pyrene	4	19	3 U	2 U	2 U	2 U	2 U					
Benzo(a)Anthracene	3 U	3	3 U	2 U	2 U	2 U	2 U					
Chrysene	3 U	3	3 U	2 U	2 U	2 U	2 U					
-----Priority pollutant metals (ug/L)												
Antimony	6	3.7 U	2 U	3.7 U	2 U		3.7 U	9000 *	1600 *			
Arsenic	1	2.1 U	1 U	2.1 U	1 U		2.1 U	+(850*)360	(48*)190	(2319*)69	(13*)	
36												
Chromium	10 U	3.5	10 U	2.9 U	10 U		2.9 U	++(16)980#	(11)120#	(1100)10300*	(50)	
Zinc	5.3	12.3 U	5	34.1	4 U		53.2	65#	59#	95	86	

U indicates compound was analyzed for but not detected at the given detection limit

J indicates an estimated value when result is less than specified detection limit

B This flag is used when the analyte is found in the blank as well as the sample. Indicates possible/probable blank contamination.

M indicates an estimated value of analyte found and confirmed by analyst but with low spectral match parameters

* - insufficient data to develop criteria. Lowest Observed Effect Level (LOEL) presented.

** - Method blank MB801 is for samples 318084 and 318096. Method blank MB804 is for samples 318085, 318087, and 318088.

+ - Arsenic criteria are (V)III.

++ - Chromium criteria are (VI)III.

- Criteria are for a hardness of 50 mg/L as $CaCO_3$.
001 hardness was approximately 60 mg/L as $CaCO_3$.
002 hardness was approximately 50 mg/L as $CaCO_3$.

Table 9 - Water Bioassay Results - Intalco, July 1988

DAPHNIA RESULTS - (Ecology tested Daphnia pulex)
(Intalco tested Daphnia magna)

	% Survival in 100% Effluent		
Sample: Lab Log #:	Control	001 + Wastewtr 318081	002 Stormwtr 318083
Ecology Results *	95 **	85	100
Intalco Results	100	100	100

+ - Ecology chlorine residual 0.06 mg/L. Ecology sample dechlorinated prior to test.
* - mean of 4 replicates: 5 organisms per replicate
** - control and control with dechlorination agent added (sodium thiosulfate) both had 95% survival

CERIODAPHNIA RESULTS - (Ceriodaphnia dubia) *

Sample: Lab Log #:	Control	001 + Wastewtr 318081	002 Stormwtr 318083
% Survival	100	100	100
Ave. # of young per adult	7.4	2.1	15.9

* - ceriodaphnia tests were run by the lab to test procedural modifications involving the control water and feeding mixture used to prepare the organisms. The results are thought to be representative of the standard ceriodaphnia test although procedures were slightly modified. Ten replicates of one organism each were run.
+ - chlorine residual 0.06 mg/L. Sample dechlorinated prior to test.

SALMONID RESULTS - Rainbow trout (Salmo gairdneri)

	% Survival in 100% Effluent *		
Sample: Lab Log #:	Control	001 + Wastewtr 318081	002 Stormwtr 318083
Ecology Results	100	100	100
Intalco Results	100	100	100

+ - chlorine residual measurement 0.06 mg/L in Ecology sample. Sample dechlorinated by both Ecology and Intalco prior to test.
* - 3 replicates: 10 organisms per replicate

Table 9 - Water Bioassay Results - Intalco, July 1988 (Continued)

ECHINODERM RESULTS - Sand Dollar (Dendraster excentricus)

E C O L O G Y R E S U L T S

Mean % of Unfertilized Eggs *

Sample:	Salinity Control	001 + Wastewtr	002 Stormwtr
Lab Log #:		318081	318083
% Sample **			
50	100.0	99.7	99.3
25	54.5	39.1	47.8
12.5	6.0	4.1	4.1
6.3	4.2	2.6	3.4
3.1	4.0	3.2	4.3
1.6	2.2	4.3	3.3
0.8	3.2	3.5	3.3

no significant toxic response for either sample

I N T A L C O R E S U L T S

Mean % of Unfertilized Eggs *

Sample:	Salinity Control	001 Wastewtr	002 Stormwtr
% Sample **			
50	63.1	70.2	62.3
25	54.7	52.1	56.1
12.5	42.7	33.6	50.0
6.0	36.9	38.9	43.3
3.0	30.0	22.4	31.6
1.5	34.1	34.3	36.7
0.1	32.5	34.4	32.4

	Salinity Control	001	002
NOEC	12.5	12.5	6.0
LOEC	25.0	25.0	12.5

+ - chlorine residual 0.06 mg/L. Sample dechlorinated prior to test.
* - mean of three replicates
** - due to low sample salinity, the maximum concentration of sample that could be tested was 50% sample - 50% seawater. This resulted in a salinity of 15-16 ppt. Good reproduction (> 50% fertilization) occured at approximately the 25% sample test. The control tests, which were adjusted to the proper salinity with deionized water, exhibited a similar response; so poor fertilization due to low salinity is assumed.

ECHINODERM RESULTS -
Purple Sea Urchin - (Strongylocentrotus purpuratus)
Green Sea Urchin - (Strongylocentrotus drobachiensis)

The laboratory was unable to induce spawning in either of these species; thus, a test could not be run.

Table 9 - Water Bioassay Results - Intalco, July 1988 (Continued)

BIVALVE LARVAE RESULTS - Pacific Oyster (Crassostrea gigas)

ECOLOGY RESULTS

Sample: Lab Log #:	Mean Net Mortality (%) +				Weighted Mean Net Abnormality (%) ++			
	Control	Salinity Check	001 Wastewtr 318081	002 Stormwtr 318083	Control	Salinity Check	001 Wastewtr 318081	002 Stormwtr 318083
% Sample **								
100	15.6 *				9.1 *			
40		1.7	8.0	0.0		13.5	100.0	11.9
20		2.4	0.0	0.0		0.0	0.0	0.0
10		0.0	0.3	4.9		4.8	0.0	0.0
5		0.0	0.0	13.3		3.2	0.0	0.0
1		4.2	0.0	19.6		0.0	0.0	0.0
0.1		0.0	0.0	0.0		0.0	0.0	0.0
0.05		12.2	6.3	1.7		4.5	0.0	0.0

no apparent acute toxicity

001 discharge - EC50 estimated to be 26% using the graphical method
002 discharge - no apparent chronic toxicity

INTALCO RESULTS

Sample:	Mean Net Mortality (%) +				Weighted Mean Net Abnormality (%) ++			
	Control	Salinity Check	001 Wastewtr	002 Stormwtr	Control	Salinity Check	001 Wastewtr	002 Stormwtr
% Sample								
100	38.8 *				6.2 *			
32		0.0	0.0	0.0		0.0	59.8	31.2
10		0.0	0.0	0.0		0.0	0.0	0.0
5		11.8	0.0	1.8		0.0	0.0	0.0
1		14.4	0.0	0.0		0.0	0.0	0.0
0.1		11.7	8.0	0.0		0.0	0.0	0.0

	001	002
NOEC	10%	10%
LOEC	32%	32%
EC50	27.8%	>32%

* - mean mortality and weighted mean abnormality listed for control. Intalco mean mortality slightly greater than the 30% limit to validate results (ASTM, 1980)
** - concentrations greater than 40% could not be tested due to low salinity

$$+ - \text{Mean Net Mortality (\%)} = 1 - \frac{\text{Mean Number of Larvae Surviving}}{\text{Mean Number of Control Larvae Surviving}} \times 100$$

$$++ - \text{Weighted Mean Net Abnormality (\%)} = \frac{\text{Weighted Mean Larval Abnormality (\%)} - \text{Weighted Mean Control Larval Abnormality (\%)}}{100 - \text{Weighted Mean Control Larval Abnormality}} \times 100$$

NOEC - No Observed Effects Concentration
LOEC - Lowest Observed Effects Concentration
EC50 - Concentration Effecting 50% of the Organisms

Table 10 - Parameters Found in Sediment Samples - Intalco, July 1988

Station:	Sediment 001		Sediment 002		Background		Sediment - Recheck		Method Blank	LAET *	ACR NOEC +
Laboratory:	Ecology	Intalco	Ecology	Intalco	Ecology	Intalco	Ecology	Intalco	Ecology	(1988b)	(1988b)
Lab Log #:	318093		318094		318092		318095				
Latitude (degree-min-sec)	48-50-29		48-50-21		48-50-47		48-51-27				
Longitude (degree-min-sec)	122-43-02		122-42-54		122-43-12		122-44-23				
% Solids	74.0	55.6	71.5	77.9	46.3	49.1	72.4	75.1			
Grain size (% dry basis)											
Gravel	<2		<2		<2		<2				
Sand	45.4	55.8	92.7	89.9	26.3	25.2	86.4	85.3			
Silt	43.3	33.4	6.2	8.7	59.0	59.6	9.9	10.3			
Clay	11.3	10.8	1.1	1.4	14.7	15.2	3.7	4.4			
TOC (% dry basis)	12.1	13	0.27	0.5	1.57	2.0	0.96	0.5			
Cyanide (mg/Kg dry wt)	0.36	0.38 U	0.05	0.15 U	0.28	0.43 U	0.10	0.15 U			
Fluoride (mg/Kg dry wt)	330	4712	80	399	63	812	84	327			
---------- VOA Compounds (ug/Kg dry wt)											
Acetone	8.5 U	53	5.8 U	22	10 U	23	5.6 U	28	6.9 U		
Methylene Chloride	14 B		6.8 B		69 B		4.8 B		6.8		
---------- BNA Compounds (ug/Kg dry wt)											
Naphthalene	1700 M+	8300 U	13 U		22 U		12 U		67 U	2100	270
2-Methylnaphthalene	960 M+*	4100 U	13 U		22 U		12 U		67 U	670	190
Acenaphthene	29000 +*	52000 +*	38 M	60	11 M	35	12 U		67 U	500	200
Dibenzofuran	13000 +*	16000 +*	13 M	20	22 U	35	12 U		67 U	540	170
Fluorene	39000 +*	49000 +*	27 M	42	28 M	150	12 U		67 U	540	360
Phenanthrene	260000 +*	360000 +*	370	480	260	870 +	17	64	67 U	1500	690
Anthracene	62000 +*	85000 +*	72	96	120	310	12 U	14	67 U	960	1300
Fluoranthene	310000 +*	350000 +*	980	940	380	620	60	91	67 U	1700	3000
Pyrene	220000 +*	320000 +*	770	940	340	520	45	78	67 U	2600	1600
Benzo(a)Anthracene	130000 +*	200000 +*	440	820	130	260	26	39	67 U	1300	510
Chrysene	120000 +*	220000 +*	460	780	180	340	26	42	67 U	1400	920
Bis(2-Ethylhexyl)phthalate	1700 +*	4100 U	45	48	22 U	59	18	130	67 U	1300	310
Benzo(b)Fluoranthene **		260000 }		1100		300		32	67 U }**		
Benzo(k)Fluoranthene **	180000 +*	110000 }+*	880	520	260	210	22 M	31	67 U }**	3200	990
Benzo(a)Pyrene	130000 +*	220000 +*	630	920	140	250	24	31	67 U	1600	360
Indeno(1,2,3-cd)Pyrene	93000 +*	119000 +*	600	470	120 M	110	12 U		67 U	600	260
Dibenzo(a,h)Anthracene	35000 +*	39000 +*	210	160	22 U		12 U		67 U	230	97
Benzo(g,h,i)Perylene	85000 +*	97000 +*	500	440	85	91	16 M		67 U	670	260
---------- Pest/PCB Compounds (ug/Kg dry wt)											
Aroclor-1242	48000 +*	18000 +*	2700 }	1100 }	54		12 U		67 U }	Total PCBs	
Aroclor-1248			12 U}+*	1100 }+*					}	130	310
Aroclor-1254	220 U		420 }		58		12 U		67 U }		
4,4'-DDD	22 U	220									
Endrin Ketone	22 U	390									
---------- Priority pollutant metals (mg/Kg dry wt)											
Arsenic	6.3	6.0	1.7 W	2.5	3.4 W	5.6	2.6 W	2.8		57	57
Beryllium	0.9	0.26 U	0.3	0.36	0.6	0.30	0.4	0.21			
Chromium	29.4 +	27.4 +	15.2	18.2	30 +	35.8 +	14.3	17.2		260	27
Copper	26.1	14.7	8.8	7.9	23	15.1	8.9	6.5		390	130
Lead	8.4	10.1	2.3	2.2	7.4	9.1	1.4	3.2		450	66
Mercury	0.035	0.16 U	0.025	0.09 U	0.073	0.20 U	0.032	0.11 U		0.41	0.21
Nickel	70.8 +	35.9 +	30.2 +	14.9 +	68.0 +	43.2 +	28.0 +	14.2 +		>140	14
Selenium	0.4	0.30 U	0.2 U	0.19 U	0.5	0.29 U	0.4	0.20 U			
Thallium	0.13	0.48	0.13 U	0.30 U	0.14	0.47 U	0.23	0.39			
Zinc	58.3	62.2	29.0	32.4	59.0	70.5	29.6	33.5		410	160
Aluminum	42020	34400	6170	7400	12570	13700	7260	10600			

U indicates compound was analyzed for but not detected at the given detection limit

J indicates an estimated value when result is less than specified detection limit

B This flag is used when the analyte is found in the blank as well as the sample. Indicates possible/probable blank contamination

M indicates an estimated value of analyte found and confirmed by analyst but with low spectral match parameters

W & S interferences with analysis; estimated value

* - exceeds Lowest Apparent Effects Threshold (LAET)

+ - exceeds Acute to Chronic Ratio No Observable Effects Concentration (ACR NOEC)

** - Ecology results, LAET, and ACR NOEC are total benzofluoranthenes

Table 11 - Sediment Bioassay Results - Intalco, July 1988

AMPHIPOD RESULTS - (Rhepoxynius abronius)

Sample	Ecology Lab Log #	% Survival * Ecology Results	% Survival * Intalco Results
Control		99	98
Background	318092	78 **	93
001	318093	84	53 +
002	318094	93	92
Recheck	318095	97	95

* - average of 5 replicates of 20 organisms each.

** - one of the replicates had only 40% survival. Average survival of the other 4 replicates was 88%.

\+ - one of the replicates had only 10% survival. Average survival of the other 4 replicates was 64%.

APPENDICES

Appendix - Ecology Results of VOA, BNA, Pest/PCB and Metals Priority Pollutant Scans of Water Samples - Intalco, July 1988

Sample:	Outfall 001		Outfall 002		Field Blank	Method Blank *	Method Blank *
Lab Log #:	318084	318085	318087	318088	318096		
Type:	Grab	Grab	Grab	Grab		MB801	MB804
Date:	7/26	7/27	7/26	7/27	7/26		
Time:	1600	0955	1625	0855			
VOA Compounds (ug/L)							
Chloromethane	2.9 U	2.9 U	2.9 U	2.9 U	2.9 U	2.9 U	2.9 U
Bromomethane	0.9 U	0.9 U	0.9 U	0.9 U	0.9 U	0.9 U	0.9 U
Vinyl Chloride	1.1 U	1.1 U	1.1 U	1.1 U	1.1 U	1.1 U	1.1 U
Chloroethane	0.9 U	0.9 U	0.9 U	0.9 U	0.9 U	0.9 U	0.9 U
Methylene Chloride	10 B	14 B	6.1 B	4.4 B	18 B	1.6	6.8
Acetone	10	38	0.6 U	0.6 U	11	0.6 U	0.6 U
Carbon Disulfide	2.0 U	2.0 U	2.0 U	2.0 U	2.0 U	2.0 U	3.2
1,1-Dichloroethene	1.3 U	1.3 U	1.3 U	1.3 U	1.3 U	1.3 U	1.3 U
1,1-Dichloroethane	1.1 U	1.1 U	1.1 U	1.1 U	1.1 U	1.1 U	1.1 U
1,2-Dichloroethene (total)	2.3 U	2.3 U	2.3 U	2.3 U	2.3 U	2.3 U	2.3 U
Chloroform	4.3	4.3	1.6	1.4	1.3	0.9 U	0.9 U
2-Butanone	1.0 U	5.8 B	1.0 U	1.0 U	1.0 U	1.0 U	12
1,2-Dichloroethane	0.6 U	0.6 U	0.6 U	0.6 U	0.6 U	0.6 U	0.6 U
1,1,1-Trichloroethane	1.0 U	1.0 U	1.0 U	1.0 U	1.0 U	1.0 U	1.0 U
Carbon Tetrachloride	0.5 U	0.5 U	0.5 U	0.5 U	0.5 U	0.5 U	0.5 U
Vinyl Acetate	1.7 U	1.7 U	1.7 U	1.7 U	1.7 U	1.7 U	1.7 U
Bromodichloromethane	0.2 U	0.2 U	0.2 U	0.2 U	0.2 U	0.2 U	0.2 U
1,2-Dichloropropane	0.6 U	0.6 U	0.6 U	0.6 U	0.6 U	0.6 U	0.6 U
Trichloroethene	0.8 U	0.8 U	0.8 U	0.8 U	0.8 U	0.8 U	0.8 U
Benzene	0.4 U	0.4 U	0.4 U	0.4 U	0.4 U	0.4 U	0.4 U
Dibromochloromethane	0.9 U	0.9 U	0.9 U	0.9 U	0.9 U	0.9 U	0.9 U
1,1,2-Trichloroethane	0.3 U	0.3 U	0.3 U	0.3 U	0.3 U	0.3 U	0.3 U
Bromoform	0.3 U	0.3 U	0.3 U	0.3 U	0.3 U	0.3 U	0.3 U
4-Methyl-2-Pentanone	1.8 U	1.8 U	1.8 U	1.8 U	1.8 U	1.8 U	1.8 U
2-Hexanone	1.3 U	1.3 U	1.3 U	1.3 U	1.3 U	1.3 U	1.3 U
1,1,2,2-Tetrachloroethane	0.6 U	0.6 U	0.6 U	0.6 U	0.6 U	0.6 U	0.6 U
Tetrachloroethene	0.6 U	0.6 U	0.6 U	0.6 U	0.6 U	0.6 U	0.6 U
Toluene	0.6 U	0.6 U	0.6 U	0.6 U	0.6 U	0.6 U	0.6 U
Chlorobenzene	0.6 U	0.6 U	0.6 U	0.6 U	0.6 U	0.6 U	0.6 U
trans-1,3-Dichloropropene	0.5 U	0.5 U	0.5 U	0.5 U	0.5 U	0.5 U	0.5 U
Ethylbenzene	1.0 U	1.0 U	1.0 U	1.0 U	1.0 U	1.0 U	1.0 U
cis-1,3-Dichloropropene	0.6 U	0.6 U	0.6 U	0.6 U	0.6 U	0.6 U	0.6 U
Styrene	0.5 U	0.5 U	0.5 U	0.5 U	0.5 U	0.5 U	0.5 U
Total Xylenes	1.5 U	1.5 U	1.5 U	1.5 U	1.5 U	1.5 U	1.5 U
2-Chloroethylvinylether	1.5 U	1.5 U	1.5 U	1.5 U	1.5 U	1.5 U	1.5 U
Cyanide (ug/L)	2 U	2	2 U	2 U			

Appendix - Water Samples - Intalco, July 1988 (Continued)

Sample:	Outfall 001	Outfall 002	Field Blank	Method Blank
Lab Log #:	318080	318082	318096	
Type:	ECO-Comp	ECO-Comp		
Date:	7/26-27	7/26-27	7/26	
BNA Compounds (ug/L)				
Phenol	3 U	3 U	2 U	2 U
Aniline				
Bis(2-Chloroethyl)Ether	3 U	3 U	2 U	2 U
2-Chlorophenol	3 U	3 U	2 U	2 U
1,3-Dichlorobenzene	3 U	3 U	2 U	2 U
1,4-Dichlorobenzene	3 U	3 U	2 U	2 U
Benzyl Alcohol	15 U	15 U	10 U	10 U
1,2-Dichlorobenzene	3 U	3 U	2 U	2 U
2-Methylphenol	3 U	3 U	2 U	2 U
Bis(2-chloroisopropyl)ether	3 U	3 U	2 U	2 U
4-Methylphenol	3 U	3 U	2 U	2 U
N-Nitroso-Di-n-Propylamine	3 U	3 U	2 U	2 U
Hexachloroethane	6 U	6 U	4 U	4 U
Nitrobenzene	3 U	3 U	2 U	2 U
Isophorone	3 U	3 U	2 U	2 U
2-Nitrophenol	15 U	15 U	10 U	10 U
2,4-Dimethylphenol	6 U	6 U	4 U	4 U
Benzoic Acid	30 U	30 U	20 U	20 U
Bis(2-Chloroethoxy)Methane	3 U	3 U	2 U	2 U
2,4-Dichlorophenol	9 U	9 U	6 U	6 U
1,2,4-Trichlorobenzene	3 U	3 U	2 U	2 U
Naphthalene	3 U	3 U	2 U	2 U
4-Chloroaniline	9 U	9 U	6 U	6 U
Hexachlorobutadiene	6 U	6 U	4 U	4 U
4-Chloro-3-Methylphenol	6 U	6 U	4 U	4 U
2-Methylnaphthalene	3 U	3 U	2 U	2 U
Hexachlorocyclopentadiene	15 U	15 U	10 U	10 U
2,4,6-Trichlorophenol	15 U	15 U	10 U	10 U
2,4,5-Trichlorophenol	15 U	15 U	10 U	10 U
2-Chloronaphthalene	3 U	3 U	2 U	2 U
2-Nitroaniline	15 U	15 U	10 U	10 U
Dimethyl Phthalate	3 U	3 U	2 U	2 U
Acenaphthylene	3 U	3 U	2 U	2 U
3-Nitroaniline	15 U	15 U	10 U	10 U
Acenaphthene	3	3 U	2 U	2 U
2,4-Dinitrophenol	30 U	30 U	20 U	20 U
4-Nitrophenol	15 U	15 U	10 U	10 U
Dibenzofuran	3 U	3 U	2 U	2 U
2,4-Dinitrotoluene	15 U	15 U	10 U	10 U
2,6-Dinitrotoluene	15 U	15 U	10 U	10 U
Diethyl Phthalate	3 U	3 U	2 U	2 U
4-Chlorophenyl-Phenylether	3 U	3 U	2 U	2 U
Fluorene	1 M	3 U	2 U	2 U
4-Nitroaniline	15 U	15 U	10 U	10 U
4,6-Dinitro-2-Methylphenol	30 U	30 U	20 U	20 U
N-Nitrosodiphenylamine	3 U	3 U	2 U	2 U
1,2-Diphenylhydrazine				
4-Bromophenyl-Phenylether	3 U	3 U	2 U	2 U

Appendix - Water Samples - Intalco, July 1988 (Continued)

Sample:	Outfall 001	Outfall 002	Field Blank	Method Blank
Lab Log #:	318080	318082	318096	
Type:	ECO-Comp	ECO-Comp		
Date:	7/26-27	7/26-27	7/26	
Hexachlorobenzene	3 U	3 U	2 U	2 U
Pentachlorophenol	15 U	15 U	10 U	10 U
Phenanthrene	15	3 U	2 U	2 U
Anthracene	3 U	3 U	2 U	2 U
Di-n-Butyl Phthalate	3 U	3 U	2 U	2 U
Fluoranthene	8	3 U	2 U	2 U
Pyrene	4	3 U	2 U	2 U
Benzidine				
Butylbenxylphthalate	3 U	3 U	2 U	2 U
3,3'-Dichlorobenzidine	15 U	15 U	10 U	10 U
Benzo(a)Anthracene	3 U	3 U	2 U	2 U
Chrysene	3 U	3 U	2 U	2 U
Bis(2-Ethylhexyl)phthalate	3 U	3 U	2 U	2 U
Di-n-Octyl Phthalate	3 U	3 U	2 U	2 U
Benzo(b)Fluoranthene	3 U	3 U	2 U	2 U
Benzo(k)Fluoranthene	3 U	3 U	2 U	2 U
Benzo(a)Pyrene	3 U	3 U	2 U	2 U
Indeno(1,2,3-cd)Pyrene	3 U	3 U	2 U	2 U
Dibenzo(a,h)Anthracene	3 U	3 U	2 U	2 U
Benzo(g,h,i)Perylene	3 U	3 U	2 U	2 U
Pest/PCB Compounds (ug/L)				
alpha-BHC	0.07 U	0.07 U	0.05 U	0.05 U
beta-BHC	0.07 U	0.07 U	0.05 U	0.05 U
delta-BHC	0.07 U	0.07 U	0.05 U	0.05 U
gamma-BHC (Lindane)	0.07 U	0.07 U	0.05 U	0.05 U
Heptachlor	0.07 U	0.07 U	0.05 U	0.05 U
Aldrin	0.07 U	0.07 U	0.05 U	0.05 U
Heptachlor Epoxide	0.07 U	0.07 U	0.05 U	0.05 U
Endosulfan I	0.22 U	0.22 U	0.15 U	0.15 U
Dieldrin	0.15 U	0.15 U	0.10 U	0.10 U
4,4'-DDE	0.15 U	0.15 U	0.10 U	0.10 U
Endrin	0.15 U	0.15 U	0.10 U	0.10 U
Endosulfan II	0.15 U	0.15 U	0.10 U	0.10 U
4,4'-DDD	0.15 U	0.15 U	0.10 U	0.10 U
Endosulfan Sulfate	0.15 U	0.15 U	0.10 U	0.10 U
4,4'-DDT	0.15 U	0.15 U	0.10 U	0.10 U
Methoxychlor	0.30 U	0.30 U	0.20 U	0.20 U
Endrin Ketone	0.15 U	0.15 U	0.10 U	0.10 U
alpha-Chlordane ** }				
gamma-Chlordane ** }	0.70 U	0.70 U	0.50 U	0.50 U
Toxaphene	7.50 U	7.50 U	5.00 U	5.00 U
Aroclor-1016	1.50 U	1.50 U	1.00 U	1.00 U
Aroclor-1221	1.50 U	1.50 U	1.00 U	1.00 U
Aroclor-1232	1.50 U	1.50 U	1.00 U	1.00 U
Aroclor-1242	1.50 U	1.50 U	1.00 U	1.00 U
Aroclor-1248	1.50 U	1.50 U	1.00 U	1.00 U
Aroclor-1254	1.50 U	1.50 U	1.00 U	1.00 U
Aroclor-1260	1.50 U	1.50 U	1.00 U	1.00 U
Endrin Aldehyde				

Appendix - Water Samples - Intalco, July 1988 (Continued)

Sample:	Outfall 001	Outfall 002	Field Blank	Method Blank
Lab Log #:	318080	318082	318096	
Type:	ECO-Comp	ECO-Comp		
Date:	7/26-27	7/26-27	7/26	
Priority pollutant metals (ug/L)				
Antimony	6	2 U	2 U	
Arsenic	1	1 U	1 U	
Beryllium	1 U	1 U	1 U	
Cadmium	5 U	5 U	5 U	
Chromium	10 U	10 U	10 U	
Copper	3 U	3 U	3 U	
Lead	3 U (50U ICP)	3 U (50U ICP)	251 (50U ICP)	
Mercury	0.090 U	0.090 U	0.090 U	
Nickel	10 U	10 U	10 U	
Selenium	2 U	2 U	2 U	
Silver	0.5 U	0.5 U	0.5 U	
Thallium	1.3 U	1.3 U	1.3 U	
Zinc	5.3	5	4 U	

U indicates compound was analyzed for but not detected at the given detection limit

J indicates an estimated value when result is less than specified detection limit

B This flag is used when the analyte is found in the blank as well as the sample. Indicates possible/probable blank contamination

M indicates an estimated value of analyte found and confirmed by analyst but with low spectral match parameters

* - Method blank MB801 is for samples 318084 and 318096. Method blank MB804 is for samples 318085, 318087, and 318088.

** - Total Chlordane

Appendix - Ecology Results of VOA, BNA, Pest/PCB and Metals Priority Pollutant Scans of Sediment Samples - Intalco, July 1988

Station Lab Log #	Sediment 001 318093	Sediment 002 318094	Background 318092	Sediment - Recheck 318095	Method Blank	LAET (1988b)	ACR NOEC (1988b)
Latitude (degree-min-sec)	48-50-29	48-50-21	48-50-47	48-51-27			
Longitude (degree-min-sec)	122-43-02	122-42-54	122-43-12	122-44-23			
% Solids	74.0	71.5	46.3	72.4			
Grain size (% dry basis)							
Gravel	<2	<2	<2	<2			
Sand	45.4	92.7	26.3	86.4			
Silt	43.3	6.2	59.0	9.9			
Clay	11.3	1.1	14.7	3.7			
TOC (% dry basis)	12.1	0.27	1.57	0.96			
Cyanide (mg/Kg dry wt)	0.36	0.05	0.28	0.10			
Fluoride (mg/Kg dry wt)	330	80	63	84			
VOA Compounds (ug/Kg dry wt)							
Chloromethane	4.7 U	3.2 U	5.8 U	3.1 U	3.8 U		
Bromomethane	3.8 U	2.6 U	4.7 U	2.5 U	3.1 U		
Vinyl Chloride	2.5 U	1.7 U	3.0 U	1.6 U	2.0 U		
Chloroethane	4.0 U	2.8 U	5.0 U	2.7 U	3.3 U		
Methylene Chloride	14 B	6.8 B	69 B	4.8 B	6.8		
Acetone	8.5 U	5.8 U	10 U	5.6 U	6.9 U		
Carbon Disulfide	1.5 U	1.0 U	1.8 U	1.0 U	1.2 U		
1,1-Dichloroethene	0.9 U	0.6 U	1.1 U	0.6 U	0.7 U		
1,1-Dichloroethane	0.7 U	0.5 U	0.9 U	0.5 U	0.6 U		
1,2-Dichloroethene (total)	1.0 U	0.7 U	1.2 U	0.7 U	0.8 U		
Chloroform	1.3 U	0.9 U	1.7 U	0.9 U	1.1 U		
2-Butanone	7.6 U	5.2 U	9.4 U	5.1 U	6.2 U		
1,2-Dichloroethane	0.6 U	0.4 U	0.8 U	0.4 U	0.5 U		
1,1,1-Trichloroethane	0.7 U	0.5 U	0.9 U	0.5 U	0.6 U		
Carbon Tetrachloride	1.1 U	0.8 U	1.4 U	0.7 U	0.9 U		
Vinyl Acetate	3.8 U	2.6 U	4.7 U	2.5 U	3.1 U		
Bromodichloromethane	0.4 U	0.3 U	0.5 U	0.2 U	0.3 U		
1,2-Dichloropropane	0.9 U	0.6 U	1.1 U	0.6 U	0.7 U		
Trichloroethene	0.7 U	0.5 U	0.9 U	0.5 U	0.6 U		
Benzene	1.2 U	0.8 U	1.5 U	0.8 U	1.0 U		
Dibromochloromethane	0.9 U	0.6 U	1.1 U	0.6 U	0.7 U		
1,1,2-Trichloroethane	0.9 U	0.6 U	1.1 U	0.6 U	0.7 U		
Bromoform	3.1 U	2.1 U	3.8 U	2.0 U	2.5 U		
4-Methyl-2-Pentanone	4.3 U	2.9 U	5.3 U	2.9 U	3.5 U		
2-Hexanone	3.9 U	2.7 U	4.8 U	2.6 U	3.2 U		
1,1,2,2-Tetrachloroethane	3.3 U	2.3 U	4.1 U	2.2 U	2.7 U		
Tetrachloroethene	0.6 U	0.4 U	0.8 U	0.4 U	0.5 U	57	21(>210)
Toluene	1.0 U	0.7 U	1.2 U	0.7 U	0.8 U		
Chlorobenzene	1.1 U	0.8 U	1.4 U	0.7 U	0.9 U		
trans-1,3-Dichloropropene	2.2 U	1.5 U	2.7 U	1.5 U	1.8 U		
Ethylbenzene	1.0 U	0.7 U	1.2 U	0.7 U	0.8 U	10	5(>50)
cis-1,3-Dichloropropene	2.3 U	1.6 U	2.9 U	1.5 U	1.9 U		
Styrene	1.3 U	0.9 U	1.7 U	0.9 U	1.1 U		
Total Xylenes	2.2 U	1.5 U	2.7 U	1.5 U	1.8 U	40	16(>160)
2-Chloroethylvinylether	3.3 U	2.3 U	4.1 U	2.2 U	2.7 U		

Appendix - Sediment Samples - Intalco, July 1988 (Continued)

Station Lab Log #	Sediment 001 318093	Sediment 002 318094	Background 318092	Sediment - Recheck 318095	Method Blank	LAET (1988b)	ACR NOEC (1988b)
BNA Compounds (ug/Kg dry wt)							
Phenol	1700 U	13 U	22 U	12 U	67 U	420	120
Aniline							
Bis(2-Chloroethyl)Ether	1700 U	13 U	22 U	12 U	67 U		
2-Chlorophenol	1700 U	13 U	22 U	12 U	67 U		
1,3-Dichlorobenzene	1700 U	13 U	22 U	12 U	67 U	>170	17(>170)
1,4-Dichlorobenzene	1700 U	13 U	22 U	12 U	67 U	110	12
Benzyl Alcohol	8300 U	60 U	110 U	60 U	330 U	57	87
1,2-Dichlorobenzene	1700 U	13 U	22 U	12 U	67 U	35	11(>110)
2-Methylphenol	1700 U	13 U	22 U	12 U	67 U	63	7.2
Bis(2-chloroisopropyl)ether	1700 U	13 U	22 U	12 U	67 U		
4-Methylphenol	1700 U	13 U	22 U	12 U	67 U	670	360
N-Nitroso-Di-n-Propylamine	1700 U	13 U	22 U	12 U	67 U		
Hexachloroethane	3300 U	25 U	45 U	20 U	130 U		
Nitrobenzene	1700 U	13 U	22 U	12 U	67 U		
Isophorone	1700 U	13 U	22 U	12 U	67 U		
2-Nitrophenol	8300 U	60 U	110 U	60 U	330 U		
2,4-Dimethylphenol	3300 U	25 U	45 U	20 U	130 U	29	21
Benzoic Acid	17000 U	120 U	220 U	120 U	670 U	650	76
Bis(2-Chloroethoxy)Methane	1700 U	13 U	22 U	12 U	67 U		
2,4-Dichlorophenol	5000 U	37 U	67 U	40 U	200 U		
1,2,4-Trichlorobenzene	1700 U	13 U	22 U	12 U	67 U	31	6.4
Naphthalene	1700 M	13 U	22 U	12 U	67 U	2100	270
4-Chloroaniline	5000 U	37 U	67 U	40 U	200 U		
Hexachlorobutadiene	3300 U	25 U	45 U	20 U	130 U	11	11
4-Chloro-3-Methylphenol	3300 U	25 U	45 U	20 U	130 U		
2-Methylnaphthalene	960 M	13 U	22 U	12 U	67 U	670	190
Hexachlorocyclopentadiene	8300 U	60 U	110 U	60 U	330 U		
2,4,6-Trichlorophenol	8300 U	60 U	110 U	60 U	330 U		
2,4,5-Trichlorophenol	8300 U	60 U	110 U	60 U	330 U		
2-Chloronaphthalene	1700 U	13 U	22 U	12 U	67 U		
2-Nitroaniline	8300 U	60 U	110 U	60 U	330 U		
Dimethyl Phthalate	1700 U	13 U	22 U	12 U	67 U	71	140(>1400)
Acenaphthylene	1700 U	13 U	22 U	12 U	67 U	>560	130
3-Nitroaniline	8300 U	60 U	110 U	60 U	330 U		
Acenaphthene	29000	38 M	11 M	12 U	67 U	500	200
2,4-Dinitrophenol	17000 U	120 U	220 U	120 U	670 U		
4-Nitrophenol	8300 U	60 U	110 U	60 U	330 U		
Dibenzofuran	13000	13 M	22 U	12 U	67 U	540	170
2,4-Dinitrotoluene	8300 U	60 U	110 U	60 U	330 U		
2,6-Dinitrotoluene	8300 U	60 U	110 U	60 U	330 U		
Diethyl Phthalate	1700 U	13 U	22 U	12 U	67 U	>48	120(>1200)
4-Chlorophenyl-Phenylether	1700 U	13 U	22 U	12 U	67 U		
Fluorene	39000	27 M	28 M	12 U	67 U	540	360
4-Nitroaniline	8300 U	60 U	110 U	60 U	330 U		
4,6-Dinitro-2-Methylphenol	17000 U	120 U	220 U	120 U	670 U		
N-Nitrosodiphenylamine	1700 U	13 U	22 U	12 U	67 U	28	13
1,2-Diphenylhydrazine							
4-Bromophenyl-Phenylether	1700 U	13 U	22 U	12 U	67 U		

Appendix - Sediment Samples - Intalco, July 1988 (Continued)

Station Lab Log #	Sediment 001 318093	Sediment 002 318094	Background 318092	Sediment - Recheck 318095	Method Blank	LAET (1988b)	ACR NOEC (1988b)
Hexachlorobenzene	1700 U	13 U	22 U	12 U	67 U	22	22
Pentachlorophenol	8300 U	60 U	110 U	60 U	330 U	>140	69
Phenanthrene	260000	370	260	17	67 U	1500	690
Anthracene	62000	72	120	12 U	67 U	960	1300
Di-n-Butyl Phthalate	1700 U	13 U	22 U	12 U	67 U	1400	510(>5100)
Fluoranthene	310000	980	380	60	67 U	1700	3000
Pyrene	220000	770	340	45	67 U	2600	1600
Benzidine							
Butylbenxylphthalate	1700 U	13 U	22 U	12 U	67 U	63	90
3,3'-Dichlorobenzidine	8300 U	60 U	110 U	60 U	330 U		
Benzo(a)Anthracene	130000	440	130	26	67 U	1300	510
Chrysene	120000	460	180	26	67 U	1400	920
Bis(2-Ethylhexyl)phthalate	1700 U	45	22 U	18	67 U	1300	310(>3100)
Di-n-Octyl Phthalate	1700 U	13 U	22 U	12 U	67 U	>420	620
Benzo(b)Fluoranthene}					67 U		
Benzo(k)Fluoranthene}	180000	880	260	22 M	67 U	3200	990
Benzo(a)Pyrene	130000	630	140	24	67 U	1600	360
Indeno(1,2,3-cd)Pyrene	93000	600	120 M	12 U	67 U	600	260
Dibenzo(a,h)Anthracene	35000	210	22 U	12 U	67 U	230	97
Benzo(g,h,i)Perylene	85000	500	85	16 M	67 U	670	260
Pest/PCB Compounds (ug/Kg dry wt)							
alpha-BHC	11 U	0.6 U	1.1 U	0.6 U	3.3 U		
beta-BHC	11 U	0.6 U	1.1 U	0.6 U	3.3 U		
delta-BHC	11 U	0.6 U	1.1 U	0.6 U	3.3 U		
gamma-BHC (Lindane)	11 U	0.6 U	1.1 U	0.6 U	3.3 U		
Heptachlor	11 U	0.6 U	1.1 U	0.6 U	3.3 U		
Aldrin	11 U	0.6 U	1.1 U	0.6 U	3.3 U		
Heptachlor Epoxide	11 U	0.6 U	1.1 U	0.6 U	3.3 U		
Endosulfan I	33 U	1.9 U	3.3 U	1.9 U	10 U		
Dieldrin	22 U	1.2 U	2.2 U	1.2 U	6.7 U		
4,4'-DDE	22 U	1.2 U	2.2 U	1.2 U	6.7 U		
Endrin	22 U	1.2 U	2.2 U	1.2 U	6.7 U		
Endosulfan II	22 U	1.2 U	2.2 U	1.2 U	6.7 U		
4,4'-DDD	22 U	1.2 U	2.2 U	1.2 U	6.7 U		
Endosulfan Sulfate	22 U	1.2 U	2.2 U	1.2 U	6.7 U		
4,4'-DDT	22 U	1.2 U	2.2 U	1.2 U	6.7 U		
Methoxychlor	44 U	2.5 U	4.5 U	2.5 U	13 U		
Endrin Ketone	22 U	1.2 U	2.2 U	1.2 U	6.7 U		
alpha-Chlordane * }							
gamma-Chlordane * }	110 U	6.2 U	11 U	6.2 U	33 U		
Toxaphene	1100 U	62 U	110 U	62 U	330 U		
Aroclor-1016	220 U	12 U	22 U	12 U	67 U }		
Aroclor-1221	220 U	12 U	22 U	12 U	67 U }		
Aroclor-1232	220 U	12 U	22 U	12 U	67 U }		
Aroclor-1242	48000	2700	54	12 U	67 U }	130	310
Aroclor-1248	220 U	12 U	22 U	12 U	67 U }		
Aroclor-1254	220 U	420	58	12 U	67 U }		
Aroclor-1260	220 U	12 U	22 U	12 U	67 U }		
Endrin Aldehyde							

Appendix - Sediment Samples - Intalco, July 1988 (Continued)

Station Lab Log #	Sediment 001 318093	Sediment 002 318094	Background 318092	Sediment - Recheck 318095	Method Blank	LAET (1988b)	ACR NOEC (1988b)
Priority pollutant metals (mg/Kg dry wt)							
Antimony						150	20
Arsenic	6.3 S	1.7 W	3.4 W	2.6 W		57	57
Beryllium	0.9	0.3	0.6	0.4			
Cadmium	0.5 U	0.5 U	0.5 U	0.5 U		5.1	0.96
Chromium	29.4	15.2	30	14.3		260	27
Copper	26.1	8.8	23	8.9		390	130
Lead	8.4	2.3	7.4	1.4		450	66
Mercury	0.035	0.025	0.073	0.032		0.41	0.21
Nickel	70.8	30.2	68.0	28.0		>140	14(>140)
Selenium	0.4	0.2 U	0.5	0.4			
Silver						>0.56	0.61
Thallium	0.13	0.13 U	0.14	0.23			
Zinc	58.3	29.0	59.0	29.6		410	160

U indicates compound was analyzed for but not detected at the given detection limit

J indicates an estimated value when result is less than specified detection limit

B This flag is used when the analyte is found in the blank as well as the sample. Indicates possible/probable blank contamination

M indicates an estimated value of analyte found and confirmed by analyst but with low spectral match parameters

* total chlordane

W & S interferences with analysis; estimated value

LAET - Lowest Apparent Effects Threshold

ACR NOEC - Acute to Chronic Ratio
No Observable Effects Concentration