90-e68

Water Body No. WA-03-0020
(Segment No. 02-03-03)

CHRISTINE O. GREGOIRE
Director

STATE OF WASHINGTON
DEPARTMENT OF ECOLOGY
7171 Cleanwater Lane, Building 8, TB-14 • Olympia, Washington 98504

June 13, 1990

TO: Kimberly E. Anderson

FROM: Don Reif

SUBJECT: Texaco Incorporated's Anacortes Refinery

INTRODUCTION

A Class II inspection was conducted at Texaco Incorporated's Anacortes refinery on June 20-22, 1988. The inspection was requested by Kimberly Anderson of Ecology's Industrial Section and conducted by Carlos E. Ruiz and Don Reif of Ecology's Environmental Investigations, Compliance Monitoring Section (CMS). Assisting was Kim Anderson, Ecology environmental engineer, and Texaco's Ken Brown, supervisor; Roland Borey, aquatic toxicologist; and Roland Garbs, laboratory manager.

The survey objectives were to:

1. Determine influent and effluent loadings.

2. Evaluate laboratory procedures, including sample splits, for accuracy and adherence to accepted analytical protocol.

3. Determine compliance with NPDES permit limits.

4. Perform a series of effluent bioassays and an outfall sediment bioassay.

LOCATION AND DESCRIPTION

Texaco's Puget Sound refinery is located on March Point, east of Anacortes. The plant processes approximately 110,000 barrels of crude oil per day. Texaco's wastewater treatment plant (WTP) is a combination oil recovery and wastewater treatment system. The treatment

system capacity is 1.9 MGD for process wastewater plus up to 1.7 MGD for ballast water, sanitary wastewater, and stormwater, for a total of 3.6 MGD. Process and ballast waters undergo the full wastewater treatment process while stormwater generally enters the system prior to the final storage pond. Alternately, stormwater can be routed through the API's if desired. Sanitary wastewater is combined with the industrial waste stream and treated in the system described below. A schematic of the WTP is shown in Figure 1.

The treatment system consists of three parallel API oil removal units, two parallel dissolved air flotation clarifiers (DAF), an equalization basin, trickling filter, two parallel activated sludge/clarifier units (aerator clarifiers), aerated lagoon, stabilization pond, and final storage pond. Effluent is pumped at 8000 gpm through the outfall line to Fidalgo Bay. The discharge location is 5000 feet offshore. The regular pump cycle begins daily at 10 a.m. for 5-6 hours. A 0.5 hour pump cycle at 6 a.m. allows collection of a grab sample. Analysis of this sample determines the length of the regular pump cycle. Chlorine is added directly to the outfall line, which then serves as the contact chamber prior to discharge into the bay.

Excess sludge is drawn off of the aerator clarifiers, gravity thickened, and is treated in the non-hazardous land farm on-site along with sludges from the bottom of the various ponds and basins. Additionally, all API, slop oil, and DAF sludges are disposed of in the coker or treated in the on-site RCRA hazardous waste landfarm.

METHODS

Ecology collected composite samples from the DAF effluent- treatment plant 'influent'- and final effluent prior to chlorination from the pump intake structure near Texaco's effluent sampler (Figure 1). Ecology's effluent sampler ran concurrently with Texaco's effluent sampler, with both sampling during the pumping period. A listing of parameters tested is shown in Table 1. Ecology's influent sampler was set to collect 200 mL at 30 minute intervals for 24 hours. The ISCO composite samplers were cleaned for priority pollutant sampling prior to field use as described in Tetra Tech, 1986.

Grab samples were also collected at several locations. Two effluent grabs were taken at the effluent sampling point. One influent grab was collected at the DAF effluent, including the volatile organics sample. Chlorinated effluent for fecal coliform and chlorine residuals were collected from Texaco's spigot on the dock near the outfall. One clarifier effluent sample was collected during a period of unusually high solids carry-over. In addition, one sample of activated sludge was taken from the aerator of one of the aerator clarifiers. Two sediment samples were collected from Fidalgo Bay near Texaco's outfall pipe with a 0.1 m2 Van Veen clamshell sampler. Sample #1 was collected 25 feet out from the dock and 25 feet up the dock (NW) from the discharge point. Sample #2 was taken in 52 feet of water, 250 feet from the discharge point and below the stairway. Also, a control sample was collected from the E-SE side of Hat Island in 18 feet of water. The three samples consisted of three or four grabs each, in which the top 2 cm from each grab were removed and composited. Each composite was homogenized using stainless steel spoons and beakers,

then divided for separate analyses. All utensils were pre-cleaned by washing with non-phosphate detergent and rinsing successively with tap water, 10 percent nitric acid, then three times with deionized water, pesticide grade methylene chloride, and finally pesticide grade acetone. Collection equipment was air-dried then wrapped in aluminum foil until used. Analytical methods are listed in Appendix 6.

RESULTS & DISCUSSION

Flow

Texaco's flowmeter is an in-line turbine meter located about 100 feet downstream of the effluent pumps. From plant records, the flow was 2.379 MGD. This figure is used in loading calculations. No checks were made to estimate the accuracy of Texaco's flowmeter during the inspection. This should be done, however. CMS now has portable flowmeters that could be used to check Texaco's flowmeter.

General Conditions

Texaco's chlorination level was high and probably excessive (4.0 mg/L total residual, 0.5 free). Not surprisingly, no fecal coliforms were detected (Table 2). The chlorine dosing rate could probably be reduced considerably. Texaco's new permit (3/1/90) specifies a maximum of 1.0 mg/L. This level should be very adequate. Texaco may find that sufficient disinfection will reliably occur at total chlorine residuals in the 0.5-0.8 mg/L range. Minimizing chlorine rates, while achieving satisfactory disinfection, is environmentally sound and cost effective as well.

At the normal pumping rate of 8000 gpm, chlorine contact time in the 20 inch, 5000 foot long outfall pipe is about 10 minutes. This is well below Ecology guidelines of 1 hour minimum at design flow and 20 minutes minimum at high flow.

Texaco's WTP seemed to be poorly maintained, even by comparison to other refineries. General housekeeping, such as upkeep of the treatment units, did not appear to be a relatively high priority.

NPDES Permit Compliance

Texaco exceeded their daily maximum limit for oil & grease: 360 lbs/day versus the limit of 290 lbs/day. All other parameters were below permitted amounts (Table 3).

Effluent Bioassays

Very little effluent toxicity was noted by the suite of acute and chronic bioassays. For the acute tests (Table 4), rainbow trout had no mortality at 65 percent effluent: *Daphnia pulex* showed 20 percent mortality at 100 percent effluent: and fathead minnows showed no mortality or adverse effects at any concentration, resulting in an LC50 of greater than 100 percent.

Results of the chronic tests were similar. No toxic response was evident, compared to the controls, for the echinoderm test. The adjusted mean response was very low, indicating that fertilization was as good or better in sample dilutions as in control dilutions with comparable salinity. For oyster larvae, Texaco's effluent did not appear to be highly toxic, with no apparent pattern relating mortality to effluent concentration. Larval abnormality was low at all concentrations below 40 percent effluent, but at 40 percent nearly all survivors were abnormal. Low salinity may have contributed, but development was good in the saline controls. Therefore, effluent is implicated in abnormality at 40 percent (M. Stinson, 1989). An EC50 of 30 percent was estimated by graph. Compared to past experience with this test, this level response is quite benign for this test, which is generally quite sensitive (Reif 1989). Additional bioassay data are listed in Appendix 4.

Effluent Chemistry

Very few organics were found in Texaco's effluent (Table 5). Of the volatiles, only acetone and methylene chloride were detected. Both of these were also detected in the field blank at similar concentrations and are therefore believed to be residuals from composite sampler cleaning. The only base/neutral acid was bis(2-ethylhexyl)phthalate at 1 ppb. A number of volatiles and BNA's were found at significant concentrations (up to 5.2 mg/L) in the influent sample. Degradation was obviously quite complete. Two pesticides were detected (Table 5). Aldrin, at 0.17 ppb in the effluent, was well below typical LC50's for rainbow trout (10 ppb- Verschueren 1983). Found in the activated sludge at about 0.21 ppb, lindane was several orders of magnitude below known toxic levels for bacteria (300 ppb & up- Verschueren 1983). Both compounds are insecticides, commonly used as soil fumigants and in wood protection (Verschueren 1983 & Meister Publishing Co. 1988).

Five priority pollutant metals were detected in Texaco's effluent, as shown in Table 6. Three- copper, mercury, and nickel- slightly exceeded some of EPA's water quality criteria (Table 7). Only mercury exceeded the criteria to a great extent, at 0.10 ppb versus 0.012 and 0.025 ppb for chronic protection of freshwater and saltwater organisms, respectively. A dilution factor of four would be necessary to prevent exceedance of the saltwater criterion.

Sediment Bioassay Results

As shown in Table 4, survival of *Rhepoxinius abronius* was significantly less in the sediment

sample near the outfall (85%) than the lab control (98%). Survival was slightly higher in sediment sample #2 (250 feet from the outfall) and was not significantly less than the controls. All mortality recorded was relatively slight, as mortality must exceed 25 percent before the sediment is classified under Ecology's Interim Sediment Quality Evaluation Process (Betts, 1989).

Sediment Chemistry

A few PNA's were detected in outfall sediment sample #1 (Table 5). These compounds (phenanthrene, fluoranthene, pyrene, and chrysene- 280, 180, 240, and 130 ug/kg dw, respectively) were well below Ecology's draft marine sediment criteria (Table 8). Metals were, likewise, well below the proposed criteria for all samples (Table 9).

Activated Sludge

Very few priority pollutants were found in the activated sludge (Appendices 1, 2, & 3). As mentioned, a small amount of lindane was found, but no VOA's or BNA's. Metals, however, were concentrated in these solids. As seen in Table 6, total chrome was highest at 30 ppm.

Laboratory Review/Split Samples Comparison

Results of split samples indicated good interlaboratory and inter-sample agreement (Table 10). BOD, TSS, COD and ammonia values agreed quite well. Fecals were not readily comparable as none were detected. Texaco's chromium value moderately exceeded Ecology's estimate (70 vs. 58 ug/L). This was similar to splits analyzed during the 1989 Class II inspection- 130 vs. 42 ug/L (Anderson, 1989). A split of Ecology's effluent sample was not done.

The lab review during the inspection indicated that Texaco's lab was not applying the seed BOD correction factor correctly. However, Texaco indicates that they do not currently seed the effluent sample because it is unchlorinated. Furthermore, the logical seed source is the same unchlorinated effluent. Whenever the Texaco lab needs to seed a sample, such as internal QA or EPA performance evaluation samples, it is important that this be done correctly, as stated in Standard Methods. The critical points are as follows. The BOD of the seed must be determined in the same manner as for all BOD tests, including appropriate dilutions, a minimum of 2.0 mg/L D.O. depletion per bottle, etc. Using this information, the portion of the observed effect in the sample that is due to the seed can be subtracted, according to the formula in Standard Methods for determining the seed correction factor. The objective is to add enough seed to the sample so that the calculated D.O. exertion of the seed falls into the range of 0.6 to 1.0 mg/L. It is incorrect to add a small amount of seed material to the blank (a QA procedure only) and then subtract this D.O. depletion from the sample BOD determination. This type of sample is too dilute (<2.0 mg/L depletion) to constitute an accurate measure of the seed's BOD, and therefore

is not an accurate measure of the effect of that seed on the test results. Misunderstanding of this procedure might have contributed to Texaco's BOD failure for the 1989 DMR QA study.

For TSS determinations, filtering should not exceed five minutes. If the sample is not fully filtered within five minutes, that sample should be terminated and a new sample filtered with a smaller volume. Then, the samples should be dried at 103-105 for 60 minutes. Texaco is urged to refer to the current (17th) edition of Standard Methods (APHA, 1990) for NPDES permit protocols.

CONCLUSIONS AND RECOMMENDATIONS

Texaco's WTP exceeded the daily maximum limit for oil and grease. Copper, nickel and mercury were elevated, with mercury exceeding by four times EPA's saltwater chronic criterion for protection of receiving waters. Organics were very low in the effluent.

Bioassays indicated very little effluent toxicity. Some toxicity was noted in the sediment sample near the outfall. The sediment toxicity, and the few organics and metals detected in that sample, were below proposed Ecology criteria.

The accuracy of Texaco's flowmeter should be field-verified.

Based on inspection findings, Texaco might be adding excessive nutrients for biological treatment and chlorine for disinfection. Plant personnel may want to study these issues.

The ten-minute chlorine contact time in Texaco's outfall line is considerably less than Ecology's guideline of 60 minutes. This issue is related to chlorine dosage rates and should be tied into the study mentioned above.

REFERENCES

Anderson, Kimberly E. 1989. Annual NPDES Compliance Inspection. Ecology memorandum to Mike Meeuwsen, Texaco. May 30, 1989.

APHA-AWWA-WPCF, 1990. Standard Methods for the Examination of Water and Wastewater, 17th edition.

Betts, Brett 1989. Interim Sediment Quality Evaluation Process for Puget Sound. Washington Department of Ecology, October 1989.

Meister Publishing Co., 1988. Farm Chemicals Handbook '88. Meister Publishing Company, Willoughby, Ohio 44094.

Reif, Don 1989. Biomonitoring Report for FY 88. Washington State Department of Ecology, Environmental Investigations and Laboratory Services, Compliance Monitoring Section. June 1989.

Stinson, Margaret, 1989. Texaco Refinery- Results of Bivalve Larvae Bioassay. Ecology memo to Carlos Ruiz. March 21, 1989.

Verschueren, K., 1983. Handbook of Environmental Data On Organic Chemicals, 2nd Ed. Van Nostrand Reinhold Company, NY. 1983.

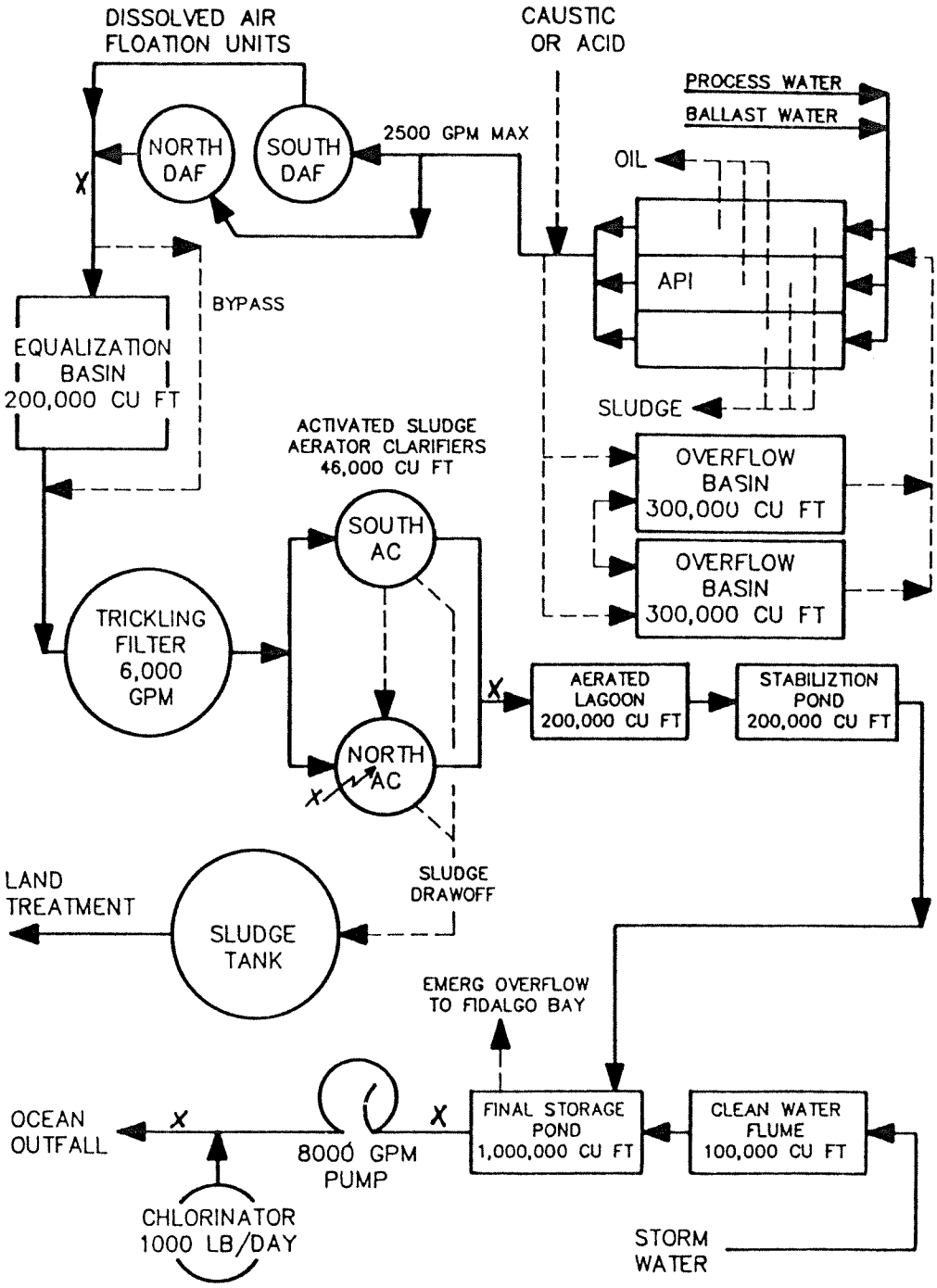

Figure 1. Treatment process schematic with sampling locations: Texaco Class II inspection- June 20-22, 1988.

Table 1. Sampling schedule: Texaco Class II Inspection - 6/20-22/88.

Station:	Influent	Effluent	Effluent	Clar.Eff.	Act.Sludge	Inf-Eco	Eff-Eco	Eff-Tex	Sed. #1	Sed. #2	Sed. Control
Date:	6/21	6/21	6/22	6/21	6/21	6/21-22	6/21-22	6/21-22	6/21	6/21	6/21
Type:	Grab	Grab	Grab	Grab	Grab	Composite	Composite	Composite	Composite	Composite	Composite
Lab Log #:	268114	268109	268110	268116	268115	268112	268111	268113	268106	268107	268105
Parameters											
GENERAL CHEMISTRY											
Turbidity (NTU)						X	X				
pH (S.U.)						X	X				
Conductivity (umhos/cm)	X	X	X			X	X				
Alkalinity (mg/L as $CaCO_3$)	X		X	X		X	X	X			
Hardness (mg/L as $CaCO_3$)			X	X	X						
Cyanide (mg/L)									X	X	X
Solids (mg/L):											
TS					X	X	X				
TNVS					X	X	X				
TSS		X	X	X	X	X	X	X			
TNVSS					X	X	X				
BOD_5 (mg/L)						X	X	X			
COD(mg/L)	X	X	X		X	X	X	X			
Nutrients (mg/L):											
NH_3-N		X	X		X	X	X	X			
$NO_3 + NO_2$-N		X	X		X	X	X				
T-Phosphate		X	X			X	X				
Grease & Oils (mg/L)	X	X	X		X						
Feacl Coliform (#/100mL)		X									
TOC, %									X	X	X
% Solids									X	X	X
Grain Size									X	X	X
ORGANICS + METALS											
pp metals					X	X	X		X	X	X
Metals (7)								X			
Chromium	X	X		X				X			
Hexachrome	X	X		X							
BNA (water)					X	X	X				
BNA (solids)									X	X	X
VOA (water)	X	X			X				X	X	X
VOA (solids)									X	X	X
Pest/PCB (water)					X	X	X				
Pest/PCB (solids)									X	X	X
Phenols		X			X	X	X	X	X	X	X
BIOASSAYS											
Rainbow Trout							X				
Daphnia pulex, 48 hr.							X				
Fathead minnow, 48 hr.							X				
Pacific Oyster							X				
Echinoderm Sperm Cell							X				
Rhep. Abr.									X	X	X
FIELD ANALYSES											
Temperature (C)		X	X			X	X	X			
pH (S.U.)		X	X			X	X	X			
Conductivity (umhos/cm)		X	X			X	X	X			
Chlorine Residual (mg/L)											
Free		X									
Total		X									
H_2S-, HS-		X									

Table 2. Summary of General Chemistry Results: Texaco Class II Inspection - 6/20-22/88.

Station:	Influent	Effluent	Effluent	Clar.Eff.	Biosolids	Inf-Eco	Eff-Eco	Eff-Tex
Date:	6/21	6/21	6/22	6/21	6/21	6/21-22	6/21-22	6/21
Type:	Grab	Grab	Grab	Grab	Grab	Composite	Composite	Composite
Parameters Time:	1520	1145	0835	1130	154	1105-1035	1030-1000	1000-1600
GENERAL CHEMISTRY								
Turbidity (NTU)						15	7	
pH (S.U.)						7.4	8.0	
Conductivity (umhos/cm)	499	1530	1580			484	1530	
Alkalinity (mg/L as $CaCO_3$)	100	100	97		170	80	96	
Hardness (mg/L as $CaCO_3$)				90	52	108		
Cyanide (mg/L)						0.045	0.026	
Solids (mg/L):								
TS					6600	330	1000	
TNVS					2500	280	890	
TSS		22	25	78	4500	28	25	27
TNVSS					1500	20	17	
BOD_5 (mg/L)						78	8	7
COD (mg/L)	230	64	77		7700	210	71	76
Nutrients (mg/L):								
NH_3-N		12	11		11	4.0	12	11
NO_3+NO_2-N		0.10	0.06		0.05	0.02	0.11	
T-Phosphate		0.41	0.40			0.20	0.43	
Grease & Oils (mg/L)	*	*	18		82.1			
Fecal Coliform (#/100mL)		<1						
Total Phenols (mg/L)		6			25	12,000	6	<5
FIELD ANALYSES								
Temperature (C)		23.4	20.8			12.4	4.8	17.2
pH (S.U.)		7.86	7.79			8.34	8.05	7.77
Conductivity (umhos/cm)		1500	1580			600	1460	1400
Chlorine Residual (mg/L)								
Free		0.5						
Total		4.0						
H2S-, HS- (mg/L)		<0.1						

* - analysis of sample was not possible due to a laboratory accident.

Table 3. Comparison of inspection results to NPDES permit limits - Texaco Class II inspection: June 20-22, 1988.

Parameter	Effluent Limitations (lbs/day) Daily Average	Daily Maximum	Inspection Results
BOD_5	540	980	160
COD	3800	7300	1410
TSS	430	680	500
Oil & Grease	160	290	360
Total Phenols	3.5	7.3	0.12
Ammonia nitrogen	310	680	240
Sulfide	2.9	6.4	<2.0
Total Chromium	6.3	15.0	1.0
Hexavalent Chromium	0.50	1.1	0.18, 0.24
pH (std. units)	6.0-9.0		7.86, 7.79
Fecal Coliform, #/100 ml	200	400	<1
Chlorine residual:			
mg/L: free	-	-	0.5
total	-	-	4.0
Flow, MGD	-	-	2.379

Table 4. Sediment Bioassay Results and Effluent Bioassay Summary: Texaco Class II Inspection - June 20-22, 1988.

Effluent-	
Rainbow trout	0% mortality at 65% effluent
Daphnia pulex	20% mortality at 100% effluent
Fathead minnow	LC*50* > 100 % effluent
Echinoderm Sperm Cell	No quantifiable toxicity
Bivalve Larvae	LC_{50} not estimated due to low mortality EC_{50} (abnormality) = 30% effluent (estimate)

Bioassay:	Results:	
Sediment-		
Rhepoxynius abronius	Survival(1)	Avoidance(2)
Sediment #1:	17.0+/-1.9*	0.04+/-0.2
Sediment #2:	17.8+/-1.6	0.3+/-0.5
Field Control:	19.2+/-0.4	0.2+/-0.4
Laboratory Control:	19.6+/-0.5	0.2+/-0.4

Notes:

* - survival was significantly less than ($P<0.05$, $F=4.38$) the lab control

1 - mean of 5 replicates of 20 each: a value of 20 = 100%

2 - number of amphipods on the surface per jar per day, out of a maximum of 20

Table 5. Organics Detected in Water and Sediment Samples: Texaco Class II Inspection -June 20-22, 1988.

	Water- ug/L				Sediments	(ug/Kg-dw)
Sample:	INF-ECO	EFF-ECO	Act.Sludge	Control	Outfall #1	Outfall #2
Type:	Composite	Composite	Grab	Composite	Composite	Composite
Date:	6/21-22	6/21-22	6/21	6/20	6/20	6/20
Volatile Organics:						
Methylene Chloride	66 B	16 B	1.1 B	9.4 B	6.5 B	7.2 B
Acetone	540 B	72 B	10 B	7.1 U	2.9	7.5 U
Chloroform	23	0.9 U	0.9 U	1.1 U	1.2 U	1.2 U
Benzene	1200	0.4 U	0.4 U	1.0 U	1.1 U	1.1 U
Toluene	4100	0.6 U	0.6 U	0.4 M	0.9 U	0.9 U
Ethylbenzene	480	1.0 U	1.0 U	0.8 U	0.9 U	0.9 U
Total Xylenes	3400	1.5 U	1.5 U	1.9 U	2.0 U	1.9 U
BNA's:						
Phenol	3300	1 U	1 U	65 U	81 U	65 U
2-Methylphenol	2700	1 U	1 U	65 U	81 U	65 U
4-Methylphenol	5200	1 U	1 U	65 U	81 U	65 U
2,4-Dimethylphenol	580	2 U	2 U	130 U	160 U	130 U
Naphthalene	300	1 U	1 U	65 U	81 U	65 U
2-Methylnaphthalene	510	1 U	1 U	65 U	81 U	65 U
Acenaphthylene	8	1 U	1 U	65 U	81 U	65 U
Acenaphthene	40	1 U	1 U	65 U	81 U	65 U
Dibenzofuran	32	1 U	1 U	65 U	81 U	65 U
Fluorene	52	1 U	1 U	65 U	81 U	65 U
Phenanthrene	120	1 U	1 U	65 U	280	65 U
Anthracene	15	1 U	1 U	65 U	81 U	65 U
Fluoranthene	7	1 U	1 U	65 U	180	65 U
Pyrene	13	1 U	1 U	65 U	240	65 U
bis(2-Ethylhexyl)Phthalate	2 U	1	1 U	65 U	81 U	65 U
Chrysene	3 M	1 U	1 U	65 U	130	65 U
Pesticides:						
Gamma-BHC (Lindane)	0.05 U	0.05 U	0.21 J	13 U	16 U	24 U
Aldrin	0.05 U	0.17	0.06 U	13 U	16 U	24 U

U Indicates compound was analyzed for but not detected at the given detection limit.

B Indicates the analyte is found in the blank as well as the sample, indicating possible/probable blank contamination.

M Indicates an estimated value of analyte found and confirmed by analyst, but with low spectral match parameters.

J Indicates an estimated value when result is less than specified detection limit.

Table 6. Metals results: Texaco Class II Inspection- June 20-22, 1988.

	ug/L							mg/Kg dry wt.		
Sample:	Influent	Effluent	Eff-Tex	Influent	Effluent	Clar-Eff	Act.Sludge	Sed #1	Sed 2	Sed.Control
Lab Log #:	268112	268111	268113	268114	268109	268116	268115	268106	268107	268105
Type:	comp	comp	comp	grab	grab	grab	grab	comp	comp	comp
Date:	06/21-22	06/21-22	06/21-22	06/21/88	06/21/88	06/21/88	06/21/88	06/21/88	06/21/88	06/21/88
Antimony	1 U	1 U					64	0.2 U	0.2 U	0.2 U
Arsenic	11	14					39	2.9	2.4	2.6
Beryllium	5 U	5 U					5 U	0.5 U	0.5 U	0.5 U
Cadmium	5 U	5 U					30	0.5 U	0.6	1.1
Chromium	155	50	58	195	46	72	29990	29.7	20.7	14.0
Hexachrome	-	-	-	3	9	12	-	-	-	-
Copper	15	6					1785	16.6	10.3	24.5
Lead	1 U	1 U					248	0.5 U	10.6	10.5
Mercury	0.08 U	0.10					42.51	0.02	0.011	0.0093
Nickel	38	28					447	46.4	43.7	31.3
Selenium	70	16					1780	0.2 U	0.2 U	0.2 U
Silver	0.2 U	0.2 U					0.2 U	0.02 U	0.02 U	0.12
Thallium	1 U	1 U					1 U	0.1 U	0.1 U	0.1 U
Zinc	30	21					9138	50.3 U	38.3	25.0

U indicates compound was analyzed for but not detected at the given detection limit

Table 7. Effluent metals compared with EPA water quality criteria: Texaco Class II Inspection June 20-22, 1988.

Sample: Type: Metal-ug/L Date:	Effluent composite 6/21-22		Criteria FW Acute	FW Chronic	SW Acute	SW Chronic
Antimony	1	U	9000	1600	-	-
Beryllium	5	U	130	5.3	-	-
Cadmium	5	U	4.28	1.20	43	9.3
Chromium+3	50	U	1849	220	10300	-
Copper	6		19	13	2.9	2.9
Lead	1	U	90	3.5	140	5.6
Mercury	0.10		2.4	0.012	2.1	0.025
Nickel	28		1514	168	75	8.3
Selenium	16		260	35	410	54
Silver	0.2	U	4.6	0.12	2.3	-
Thallium	1	U	1400	40	2130	-
Zinc	21		125	113	95	86
Hardness	108					

Table 8. Comparison of sediment organic compounds against criteria: Texaco Class II inspection - June 20-22, 1988.

Compound	Criteria*	Sed. #1
mg/Kg organic carbon		
Phenanthrene	100	47
Fluoranthene	160	30
Pyrene	1,000	40
Chrysene	110	22

* - from Ecology's Interim Sediment Quality Evaluation Process For Puget Sound (Betts 1989).

Table 9. Sediment metals compared with criteria (mg/Kg dw): Texaco Class II Inspection - June 20-22, 1988.

Metal	Criteria*	Outfall: #1	#2	Field Control
Antimony	150	<0.2	<0.2	<0.2
Arsenic	57	2.9	2.4	2.6
Cadmium	5.1	<0.5	0.6	1.1
Chromium	260	29.7	20.7	14.0
Copper	390	16.6	10.3	24.5
Lead	450	<0.5	10.6	10.5
Mercury	0.41	0.02	0.011	0.0093
Nickel	(1)	46.4	43.7	31.3
Silver	6.1	<0.02	<0.02	0.12
Zinc	410	<50.3	38.3	25.0

* - chemical criteria from Ecology's Interim Sediment Quality Evaluation Process For Puget Sound (Betts, 1989).

1 - criterion is not established.

Table 10. Comparison of laboratory results: Texaco Class II inspection - June 20-22,1988.

Sample	Sampler	Laboratory	BOD5 (mg/L)	TSS (mg/L)	Fecal Coliform (#/100mL)	NH3-N mg/L	COD mg/L	Total Chromium ug/L
Composites:								
Effluent:	Ecology	Ecology	8	25	<1	12	71	50
	Texaco	Ecology	7	27	-	11	76	58
	Texaco	Texaco	8	23	<20	14	70	70

Appendix 1. Results of BNA priority pollutant scan: Texaco Class II Inspection - June 20-22, 1988.

	Water (ug/L)			Sediments (ug/Kg-dr)		
Sample:	INF-ECO	EFF-ECO	Act. Sludge	Control	Outfall #1	Outfall #2
Lab Log #:	268112	268111	268115	268105	268106	268107
BNA Compound Type:	Composite	Composite	Grab	Composite	Composite	Composite
Date:	6/21-22	6/21-22	6/21	6/20	6/20	6/20
Phenol	3300	1 U	1 U	65 U	81 U	65 U
bis(2-Chloroethyl)Ether	2 U	1 U	1 U	65 U	81 U	65 U
2-Chlorophenol	2 U	1 U	1 U	65 U	81 U	65 U
1,3-Dichlorobenzene	2 U	1 U	1 U	65 U	81 U	65 U
1,4-Dichlorobenzene	2 U	1 U	1 U	65 U	81 U	65 U
Benzyl Alcohol	10 U	5 U	5 U	320 U	410 U	320 U
1,2-Dichlorobenzene	2 U	1 U	1 U	65 U	81 U	65 U
2-Methylphenol	2700	1 U	1 U	65 U	81 U	65 U
bis(2-chloroisopropyl)ether	2 U	1 U	1 U	65 U	81 U	65 U
4-Methylphenol	5200	1 U	1 U	6 U	81 U	65 U
N-Nitroso-Di-n-Propylamine	2 U	1 U	1 U	65 U	81 U	65 U
Hexachloroethane	4 U	2 U	2 U	130 U	160 U	130 U
Nitrobenzene	2 U	1 U	1 U	65 U	81 U	65 U
Isophorone	2 U	1 U	1 U	65 U	81 U	65 U
2-Nitrophenol	10 U	5 U	5 U	320 U	410 U	320 U
2,4-Dimethylphenol	580	2 U	2 U	130 U	160 U	130 U
Benzoic Acid	20 U	10 U	10 U	650 U	810 U	650 U
bis(2-Chloroethoxy)Methane	2 U	1 U	1 U	65 U	81 U	65 U
2,4-Dichlorophenol	6 U	3 U	3 U	194 U	244 U	195 U
1,2,4-Trichlorobenzene	2 U	1 U	1 U	65 U	81 U	65 U
Naphthalene	300	1 U	1 U	65 U	81 U	65 U
4-Chloroaniline	6 U	3 U	3 U	194 U	244 U	195 U
Hexachlorobutadiene	4 U	2 U	2 U	130 U	160 U	130 U
4-Chloro-3-Methylphenol	4 U	2 U	2 U	130 U	160 U	130 U
2-Methylnaphthalene	510	1 U	1 U	65 U	81 U	65 U
Hexachlorocyclopentadiene	10 U	5 U	5 U	320 U	410 U	320 U
2,4,6-Trichlorophenol	10 U	5 U	5 U	320 U	410 U	320 U
2,4,5-Trichlorophenol	10 U	5 U	5 U	320 U	410 U	320 U
2-Chloronaphthalene	2 U	1 U	1 U	65 U	81 U	65 U
2-Nitroaniline	10 U	5 U	5 U	320 U	410 U	320 U
Dimethyl Phthalate	2 U	1 U	1 U	65 U	81 U	65 U
Acenaphthylene	8	1 U	1 U	65 U	81 U	65 U
3-Nitroaniline	10 U	5 U	5 U	320 U	410 U	320 U
Acenaphthene	40	1 U	1 U	65 U	81 U	65 U
2,4-Dinitrophenol	20 U	10 U	10 U	650 U	810 U	650 U
4-Nitrophenol	10 U	5 U	5 U	320 U	410 U	320 U

Appendix 1 - Continued

	Water (ug/L)			Sediments (ug/Kg-dr)		
Sample:	INF-ECO	EFF-ECO	Act. Sludge	Control	Outfall #1	Outfall #2
Lab Log #:	268112	268111	268115	268105	268106	268107
BNA Compound Type:	Composite	Composite	Grab	Composite	Composite	Composite
Date:	6/21-22	6/21-22	6/21	6/20	6/20	6/20
Dibenzofuran	32	1 U	1 U	65 U	81 U	65 U
2,4-Dinitrotoluene	10 U	5 U	5 U	320 U	410 U	320 U
2,6-Dinitrotoluene	10 U	5 U	5 U	320 U	410 U	320 U
Diethylphthalate	2 U	1 U	1 U	65 U	81 U	65 U
4-Chlorophenyl-phenylether	2 U	1 U	1 U	65 U	81 U	65 U
Fluorene	52	1 U	1 U	65 U	81 U	65 U
4-Nitroaniline	10 U	5 U	5 U	320 U	410 U	320 U
4,6-Dinitro-2-Methylphenol	20 U	10 U	10 U	650 U	810 U	650 U
N-Nitrosodiphenylamine	2 U	1 U	1 U	65 U	81 U	65 U
4-Bromophenyl-phenylether	2 U	1 U	1 U	65 U	81 U	65 U
Hexachlorobenzene	2 U	1 U	1 U	65 U	81 U	65 U
Pentachlorophenol	10 U	5 U	5 U	320 U	410 U	320 U
Phenanthrene	120	1 U	1 U	65 U	280	65 U
Anthracene	15	1 U	1 U	65 U	81 U	65 U
Di-n-Butylphthalate	2 U	1 U	1 U	65 U	81 U	65 U
Fluoranthene	7	1 U	1 U	65 U	180	65 U
Pyrene	13	1 U	1 U	65 U	240	65 U
Butylbenxylphthalate	2 U	1 U	1 U	65 U	81 U	65 U
3,3'-Dichlorobenzidine	10 U	5 U	5 U	320 U	410 U	320 U
Benzo(a)Anthracene	2 U	1 U	1 U	65 U	81 U	65 U
bis(2-Ethylhexyl)Phthalate	2 U	1	1 U	65 U	81 U	65 U
Chrysene	3 M	1 U	1 U	65 U	130	65 U
Di-n-Octyl Phthalate	2 U	1 U	1 U	65 U	81 U	65 U
Benzo(b)Fluoranthene	2 U	1 U	1 U	65 U	81 U	65 U
Benzo(k)Fluoranthene	2 U	1 U	1 U	65 U	81 U	65 U
Benzo(a)Pyrene	2 U	1 U	1 U	65 U	81 U	65 U
Indeno(1,2,3-cd)Pyrene	2 U	1 U	1 U	65 U	81 U	65 U
Dibenz(a,h)Anthracene	2 U	1 U	1 U	65 U	81 U	65 U
Benzo(ghi)Perylene	2 U	1 U	1 U	65 U	81 U	65 U

U Indicates compound was analyzed for but not detected at the given detection limit.
M Indicates an estimated value of analyte found and confirmed by analyst, but with low spectral match parameters.

Appendix 2. Results of Pesticide/PCB priority pollutant scan: Texaco Class II Inspection - June 20-22, 1988.

	Water (ug/L)			Sediments (ug/Kg-dr)		
Sample:	INF-ECO	EFF-ECO	Act. Sludge	Control	Outfall #1	Outfall #2
Lab Log #:	268112	268111	268115	268105	268106	268107
Type:	Composite	Composite	Grab	Composite	Composite	Composite
Date:	6/21-22	6/21-22	6/21	6/20	6/20	6/20
Pesticide/PCB						
Alpha-BHC	0.05 U	0.05 U	0.06 U	13 U	16 U	24 U
Beta-BHC	0.05 U	0.05 U	0.06 U	13 U	16 U	24 U
Delta-BHC	0.05 U	0.05 U	0.06 U	13 U	16 U	24 U
Gamma-BHC (Lindane)	0.05 U	0.05 U	0.21 J	13 U	16 U	24 U
Heptachlor	0.05 U	0.05 U	0.06 U	13 U	16 U	24 U
Aldrin	0.05 U	0.17	0.06 U	13 U	16 U	24 U
Heptachlor Epoxide	0.05 U	0.05 U	0.06 U	13 U	16 U	24 U
Endosulfan I	0.15 U	0.15 U	0.19 U	39 U	49 U	71 U
Dieldrin	0.10 U	0.10 U	0.13 U	26 U	33 U	47 U
4,4'-DDE	0.10 U	0.10 U	0.13 U	26 U	33 U	47 U
Endrin	0.10 U	0.10 U	0.13 U	26 U	33 U	47 U
Endosulfan II	0.10 U	0.10 U	0.13 U	26 U	33 U	47 U
4,4'-DDD	0.10 U	0.10 U	0.13 U	26 U	33 U	47 U
Endosulfan Sulfate	0.10 U	0.10 U	0.13 U	26 U	33 U	47 U
4,4'-DDT	0.10 U	0.10 U	0.13 U	26 U	33 U	47 U
Methoxychlor	0.20 U	0.20 U	0.25 U	50 U	70 U	90 U
Endrin Ketone	0.10 U	0.10 U	0.13 U	26 U	33 U	47 U
Chlordane	0.50 U	0.50 U	0.60 U	130 U	160 U	240 U
Toxaphene	5.00 U	5.00 U	6.30 U	1300 U	1600 U	2400 U
Aroclor-1016	1.00 U	1.00 U	1.30 U	260 U	330 U	470 U
Aroclor-1221	1.00 U	1.00 U	1.30 U	260 U	330 U	470 U
Aroclor-1232	1.00 U	1.00 U	1.30 U	260 U	330 U	470 U
Aroclor-1242	1.00 U	1.00 U	1.30 U	260 U	330 U	470 U
Aroclor-1248	1.00 U	1.00 U	1.30 U	260 U	330 U	470 U
Aroclor-1254	1.00 U	1.00 U	1.30 U	260 U	330 U	470 U
Aroclor-1260	1.00 U	1.00 U	1.30 U	260 U	330 U	470 U

U Indicates compound was analyzed for but not detected at the given detection limit.
J Indicates an estimated value when result is less than specified detection limit.

Appendix 3. Results of VOA priority pollutant scan: Texaco Class II Inspection - June 20-22, 1988.

	Water (ug/L)			Sediments (ug/Kg-dr)		
Sample:	INF-ECO	EFF-ECO	Act. Sludge	Control	Outfall #1	Outfall #2
Lab Log #:	268112	268111	268115	268105	268106	268107
Type:	Composite	Composite	Grab	Composite	Composite	Composite
Date:	6/21-22	6/21-22	6/21	6/20	6/20	6/20
VOA Compound						
Chloromethane	58 U	2.9 U	2.9 U	3.9 U	4.3 U	4.1 U
Bromomethane	18 U	0.9 U	0.9 U	3.2 U	3.5 U	3.4 U
Vinyl Chloride	22 U	1.1 U	1.1 U	2.1 U	2.3 U	2.2 U
Chloroethane	18 U	0.9 U	0.9 U	3.4 U	3.7 U	3.6 U
Methylene Chloride	66 B	16.0 B	1.1 B	9.4 B	6.5 B	7.2 B
Acetone	540 B	72 B	10 B	7.1 U	2.9	7.5 U
Carbon Disulfide	40 U	2.0 U	2.0 U	1.2 U	1.4 U	1.3 U
1,1-Dichloroethene	26 U	1.3 U	1.3 U	0.7 U	0.8 U	0.8 U
1,1-Dichloroethane	22 U	1.1 U	1.1 U	0.6 U	0.7 U	0.7 U
1,2-Dichloroethene (total)	24 U	1.2 U	1.2 U	0.8 U	0.9 U	0.9 U
Chloroform	23	0.9 U	0.9 U	1.1 U	1.2 U	1.2 U
1,2-Dichloroethane	12 U	0.6 U	0.6 U	0.5 U	0.6 U	0.5 U
2-Butanone	20 U	1.0 U	1.0 U	6.4 U	7.0 U	6.7 U
1,1,1-Trichloroethane	20 U	1.0 U	1.0 U	0.6 U	0.7 U	0.7 U
Carbon Tetrachloride	10 U	0.5 U	0.5 U	0.9 U	1.0 U	1.0 U
Vinyl Acetate	34 U	1.7 U	1.7 U	3.2 U	3.5 U	3.4 U
Bromodichloromethane	4 U	0.2 U	0.2 U	0.3 U	0.3 U	0.3 U
1,2-Dichloropropane	12 U	0.6 U	0.6 U	0.7 U	0.8 U	0.8 U
Cis-1,3-Dichloropropene	10 U	0.5 U	0.5 U	1.9 U	2.0 U	1.9 U
Trichloroethene	16 U	0.8 U	0.8 U	0.6 U	0.7 U	0.7 U
Dibromochloromethane	18 U	0.9 U	0.9 U	0.7 U	0.8 U	0.8 U
1,1,2-Trichloroethane	6 U	0.3 U	0.3 U	0.7 U	0.8 U	0.8 U
Benzene	1200	0.4 U	0.4 U	1.0 U	1.1 U	1.1 U
Trans-1,3-Dichloropropene	12 U	0.6 U	0.6 U	2.0 U	2.1 U	2.1 U
2-Chloroethylvinylether	30 U	1.5 U	1.5 U	2.8 U	3.0 U	2.9 U
Bromoform	6 U	0.3 U	0.3 U	2.6 U	2.8 U	2.7 U
4-Methyl-2-Pentanone	36 U	1.8 U	1.8 U	3.6 U	3.9 U	3.8 U
2-Hexanone	26 U	1.3 U	1.3 U	3.3 U	3.6 U	3.5 U
Tetrachloroethene	12 U	0.6 U	0.6 U	0.5 U	0.6 U	0.5 U
1,1,2,2-Tetrachloroethane	12 U	0.6 U	0.6 U	2.8 U	3.0 U	2.9 U
Toluene	4100	0.6 U	0.6 U	0.4 M	0.9 U	0.9 U
Chlorobenzene	12 U	0.6 U	0.6 U	0.9 U	1.0 U	1.0 U
Ethylbenzene	480	1.0 U	1.0 U	0.8 U	0.9 U	0.9 U
Styrene	10 U	0.5 U	0.5 U	1.1 U	1.2 U	1.2 U
Total Xylenes	3400	1.5 U	1.5 U	1.9 U	2.0 U	1.9 U

U Indicates compound was analyzed for but not detected at the given detection limit.
B Indicates the analyte is found in the blank as well as the sample, indicates possible/probable blank contamination.
M Indicates an estimated value of analyte found and confirmed by analyst, but with low spectral match parameters.

Appendix 4. Effluent bioassay results: Texaco Class II inspection - June 20-22, 1988.

96-hour Rainbow trout (*Oncorhyncus mykiss*)

	# of live test organisms: Initial	Final	Percent Mortality
Effluent*	30	30	0
Control	30	30	0

* - 65% effluent concentration

48-hour *Daphnia pulex*

	# of live test organisms: Start	End	Percent Mortality
Effluent*	20	16	20
Control	20	18	10

* - 100% effluent concentration

Fathead Minnow (*Pimephales promelas*)- 48 hours

Effluent test concentration:	# organisms	% survival
0 % (control)	20	100
1 %	20	100
10 %	20	100
25 %	20	100
50 %	20	100
100 %	20	100

Appendix 4 - Continued

Echinoderm Sperm Cell Toxicity (*Dendraster excentricus*)

Note: Data are entered as % unfertilized eggs

	Sample (diluted with seawater)			Salinity Control*	
Dilution:	Mean*	St. Dev.	Adj. Mean++	Mean**	St. Dev.
50%	100	0.0	0	100	0.0
25%	100	0.0	0	96	1.0
12.5%	63	5.4	0	69	7.6
6.3%	40	4.5	0	39	7.8
3.2%	40	4.9	2	42	6.8
1.6%	31	2.2	0	34	5.9
0.8%	32	7.9	0	34	4.8
100% seawater+	28	4.1			

* - seawater diluted with deionized water
** - mean of three replicates
\+ - negative control
\+ + - transformed with Abbott's correction

Oyster Larvae (*Crassostrea gigas*)

	Sample					
			% Abnormality:		Salinity (ppth)	
Sample Dilution	% Mortality: Mean	Mean Net	Weighted Mean	Weighted Mean Net	Initial	Final
0.05%	0.7	0.0	1.7	0.0	30	32
0.1%	22.5	9.7	3.5	1.3	30	32
1%	29.4	17.7	0.7	0.0	30	31
5%	6.1	0.0	0.8	0.0	29	30
10%	18.6	5.1	2.1	0.0	27	29
20%	6.6	0.0	1.8	0.0	25	26
40%	20.1	6.9	99.7	99.7	19	20
100%*	16.4	-	2.2	-		

* - dilution water control, from Clam Bay

Appendix 4 - Continued

Salinity Control+

Sample Dilution	% Mortality: Mean	% Mortality: Mean Net	% Abnormality: Weighted Mean	% Abnormality: Weighted Mean Net	Salinity (ppth) Initial	Salinity (ppth) Final
0.05%	24.3	11.7	3.9	1.7	30	32
0.1%	30.4	18.9	2.8	0.6	30	32
1%	26.5	14.3	3.7	1.5	30	31
5%	19.1	5.7	2.7	0.5	29	30
10%	12.3	0.0	3.6	1.5	27	29
20%	20.3	7.1	1.8	0.0	25	26
40%	6.4	0.0	3.7	1.5	19	20

+ - Clam Bay water diluted with demineralized fresh water

Equations:

a) $$\text{Mean Larval Mortality (\%)} = \frac{\text{Mean \# of Embryos Introduced} - \text{Mean \# of Larvae Surviving}}{\text{Mean \# Embryos Introduced}} \times 100$$

b) $$\text{Mean Net Larval Mortality (\%)} = 1 - \frac{\text{Mean \# of Larvae Surviving}}{\text{Mean \# of Control Larvae Surviving}} \times 100$$

c) $$\text{Weighted Mean Larval Abnormality (\%)} = \frac{\text{\# Larvae Surviving in Replicate \#1}}{\text{\# Larvae Surviving in Replicates 1 \& 2}} \times \text{Larval Abnormality in Replicate 1 (\%)} + \frac{\text{\# Larvae Surviving in Replicate 2}}{\text{\# Larvae Surviving in Replicates 1 \# 2}} \times \text{Larval Abnormality in Replicate 2 (\%)}$$

where,

$$\text{Larval Abnormality (\%)} = \frac{\text{\# Abnormal Larvae}}{\text{\# Normal \& Abnormal Larvae}} \times 100$$

d) $$\text{Weighted Mean Net Larval Abnormality (\%)} = \frac{\text{Weighted Mean Larval Abnormality (\%)} - \text{Weighted Mean Control Larval Abnormality (\%)}}{100 - \text{Weighted Mean Control Larval Abnormality (\%)}} \times 100$$

Appendix 5. Sediment Sample Data: Texaco Class II inspection - June 20-22, 1988.

Sample	% Solids	TOC % dry	Grain Size Analysis, % Sand 2mm-62um	Silt 62um-4um	Clay <4um
Sediment #1	68	0.6	74.3	20.1	5.6
Sediment #2	77	0.6	86.2	11.2	2.6
Control	23	0.6	94.8	3.8	1.4

Appendix 6. Analytical methods - Texaco Class II inspection: June 20-22, 1988.

Analysis	Method	Laboratory
TOC (solids)	APHA, 1985: #505	Laucks Testing Labs; Seattle, Wa.
Grain Size	Tetra Tech, 1986	Laucks Testing Labs; Seattle, Wa.
% Solids	APHA, 1985: #209F	Laucks Testing Labs; Seattle, Wa.
VOA (water)	EPA, 1984: #624	ARI; Seattle, Wa.
VOA (solids)	EPA, 1986: #8240	ARI; Seattle, Wa.
NA (water)	EPA, 1984: #625	ARI; Seattle, Wa.
BNA (solids)	EPA, 1986: #8270	ARI; Seattle, Wa.
Pest/PCB (water)	EPA, 1984: #608	ARI; Seattle, Wa.
Pest/PCB (solids)	EPA, 1986: #8080	ARI; Seattle, Wa.
Metals (water)	EPA, 1983: #200 series	Ecology; Manchester, Wa.
Metals (solids)	EPA, 1983: #200 series	Ecology; Manchester, Wa.
Total phenolics	EPA, 1983: #420.2	Ecology; Manchester, Wa.
Cyanide (water)	EPA, 1983: #335.2-1	Ecology; Manchester, Wa.
Trout 96-hour	Ecology, 1981	Ecology; Manchester, Wa.
Daphnia pulex	EPA, 1985	Ecology; Manchester, Wa.
Oyster larvae	ASTM, 1986	Ecology; Manchester, Wa.
Echinoderm Sperm Cell	Dinnel et al.(1987)	Ecology; Manchester, Wa.
Fathead minnow	EPA, 1985	EA Engineering, Inc.; Lafayette, Ca.
Rhepoxinius	Tetra Tech, 1986	E.V.S. Consultants; Seattle, Wa.