91-e11

EDALEEN DAIRY LAGOON
GROUND WATER QUALITY ASSESSMENT
February 1990 to February 1991

by
Denis Erickson

Washington State Department of Ecology
Environmental Investigations and Laboratory Services Program
Toxics, Compliance, and Ground Water Investigations Section
Olympia, Washington 98504-6814

Segment No. 01-01-04GW
Water Body No. WA-01-1010GW

August 1991

ABSTRACT

Ground water monitoring was conducted at a new dairy lagoon in Whatcom County for one year. Monitoring wells were installed and sampled prior to placement of liquid manure, and monthly thereafter; the lagoon was sampled quarterly. Samples were tested for chloride, total dissolved solids, total organic carbon, chemical oxygen demand, total phosphate-P, ammonia-N, nitrite+nitrate-N, and total and fecal coliform bacteria. Ground water downgradient of the lagoon showed elevated concentrations for all parameters. With the exception of ammonia-N, concentrations increased to maximal levels and subsequently began to decrease. At the end of the first year of monitoring, concentrations in downgradient wells were still elevated relative to concentrations prior to lagoon use. These observations are consistent with a pulse contaminant source followed by leakage at a lower rate. Ground water velocity estimates at the site ranged from 0.8 to 2.1 feet per day based on chloride travel times. Additional monitoring is recommended to determine if downgradient concentrations decrease to pre-lagoon-use levels and to assure that there are no significant adverse effects on downgradient water-supply wells.

ACKNOWLEDGEMENTS

Many people contributed to the monitoring study at Edaleen Dairy. I would like to thank these people individually. Mr. Ed Brandsma, owner of Edaleen Dairy, cooperated in the study. Bob Wright, dairy waste inspector for Ecology's Northwest Regional Office, identified the site for monitoring. Dave Garland, water quality hydrogeologist at Northwest Regional Office, provided initial well information, assistance with the well installation, surveying, and peer review. Dr. Ron Hermanson with Washington State University provided pertinent literature. Bill Yake, Section Supervisor, provided input for project design and peer review. Pam Marti assisted with sampling and peer review. Will Kendra and Betsy Dickes provided peer review. Pam Covey and Craig Smith, Manchester Laboratory, tracked sample flow and assured quality analytical results. Nancy Winters, Supervisor of the Water Quality Program Ground Water Unit, provided financial support. Barbara Tovrea typed the report.

INTRODUCTION

Problem Statement

Dairy lagoons temporarily store animal wastes and wastewater during winter when nutrient uptake by cover vegetation and crops is low and the potential for surface runoff from land application of wastes is high. However, a concern exists that leakage from dairy lagoons may contaminate ground water. Past studies have shown that dairy lagoons are to some degree self-sealing and that leakage rates decrease substantially after lagoons are initially filled (Reese and Loudon, 1983). Research on the causes and mechanisms related to self-sealing of dairy lagoons suggests that at least a partial seal, consisting of settled solids, a microbial layer or a combination of both, restricts leakage from lagoons. Also, leakage rates and the rates of sealing are largely a function of soil texture and pore size (Reese and Loudon, 1983).

Although researchers agree that leakage rates decrease after lagoons first receive wastes, there is disagreement on the effectiveness of seals and whether the leakage rates pose a potential significant threat to ground water quality. Miller, Robinson, and Gillham (1985) concluded that after initial high leakage rates from an earthen storage pond in Ontario, Canada, a steady state infiltration rate of 0.9 mm/day was reached in 90 days. They also showed that chloride concentrations beneath the storage pond climbed rapidly the first two weeks of monitoring and then declined to background concentrations within 12 weeks. Meyer (1973) concluded that lagoons in fine-grained soils (sandy loam, loams, and clay loams) in the San Jauquin Valley sealed within 30 days and that the maximum leakage rates, which occurred over coarse-grained soils, were on the order of 1 mm/day. Davis, Fairbank, and Weisheit (1973) observed that leakage rates from a newly constructed lagoon in San Diego County, California, decreased to 5 mm/day four months after receiving waste. Barrington and Jutras (1983) reported that sealing was rapid in earthen manure lagoons in Quebec, and the leakage rates decreased to 0.8 to 1.7 mm/day in a matter of hours. However, Barrington and Jutras (1985) also concluded that, even after optimum sealing, leakage rates of 0.1 mm/day can be expected. Phillip and Culley (1985) concluded that after three years, leakage from earthen manure storage ponds in Ottawa, Canada, was minimal but continued at low rates. Sewell (1977) monitored ground water around a dairy lagoon in Tennessee and reported rapidly increasing concentrations of nitrate and chloride for six months following initial use, but which eventually decreased to near background concentrations. Dalen, Andersen, and Ravang (1983) concluded that leakage from a three-year-old dairy lagoon in Minnesota had reached a depth of at least 1.5 meters in silty clay soil and that this leakage represented a potential threat to ground water in sensitive environments such as karst and pervious sandstone. They estimated the leakage rate to be between 0.1 and 1.1 mm/day.

The Ground Water Quality Unit of the Ecology Water Quality Program requested that the Toxics, Compliance, and Ground Water Investigations Section of the Environmental Investigations and Laboratory Services Program conduct a study to determine ground water quality near selected dairy lagoons in Washington. Monitoring networks have been installed at four lagoons. Two lagoons are in Whatcom County, one is in Yakima County and one is in

Lewis County. Monitoring at the lagoons was initiated sequentially and Edaleen Dairy Lagoon (Whatcom County) was the first in the series. This report presents and discusses the first year of ground water monitoring results at this site.

Edaleen Lagoon History

The Edaleen Dairy is located in northern Whatcom County, Washington (Figure 1). The dairy and the lagoon system were constructed in the fall of 1989 to handle about 900 head of dairy cows. The two-stage lagoon system consists of a primary settling pond followed by a secondary main lagoon. The settling pond is 105 feet wide and 280 feet long (inside dimensions) and has a capacity of about 2.4 million gallons. The main lagoon is much larger, 275 feet wide and is 447 feet long (inside dimensions), and has a capacity of 10.4 million gallons. Based on Soil Conservation Service (SCS) engineering cross sections, the lagoon system was excavated about eight feet below the ground surface and may have intersected the water table. Topsoil was placed along the bottom and interior sides of the lagoon. The lagoon construction was not certified by the SCS prior to construction and initially did not meet SCS engineering criteria (SCS, 1979 and SCS, 1987). The SCS provided recommendations which, if implemented, would bring the lagoon into compliance with SCS standards (Gillies, 1990). Six on-site monitoring wells were installed on February 26 and 27, 1990, prior to the lagoons receiving wastewater, and a seventh well was installed on November 28, 1990. The settling pond first received manure and wastewater March 1, 1990; the main lagoon was prematurely flooded with liquid manure May 3, 1990, when the embankment separating the settling pond from the main lagoon inadvertently was breached. Initial attempts to repair the divider berm were unsuccessful due to the liquid manure in the lagoons. The berm was repaired September 1990 by dewatering both lagoons. Reportedly topsoil was amended to portions of the bottom of the main lagoon during the repair work.

Geology, Hydrogeology and Soils

The lagoon system is situated on the Lynden Prairie which is underlain by the Sumas Outwash deposits from the most recent Pleistocene glaciation (Easterbrook, 1971). The outwash deposits continuously underlie the site and consist of stratified sand and gravel. Based on vicinity well logs, the deposits range in thickness from about 40 to 50 feet. The water table, which fluctuates seasonally about four to ten feet due to variations in precipitation, irrigation, and pumping, occurs at depths ranging from about three to ten feet below ground surface. Regionally, ground water flows from north to south toward the Nooksack River. The outwash deposits represent an important source of drinking water in the area and wells completed in the aquifer have moderate to high yield. Commonly surface drainage is directed north-south by ditches that parallel the roads (Figure 1).

Soils developed in the Sumas Outwash at the site location consist of the Giles-Tromp Complex which are silt loams associated with silty and clayey glacial outwash and sandy glacial outwash with moderate infiltration rates (Poulson and Flannery, 1953).

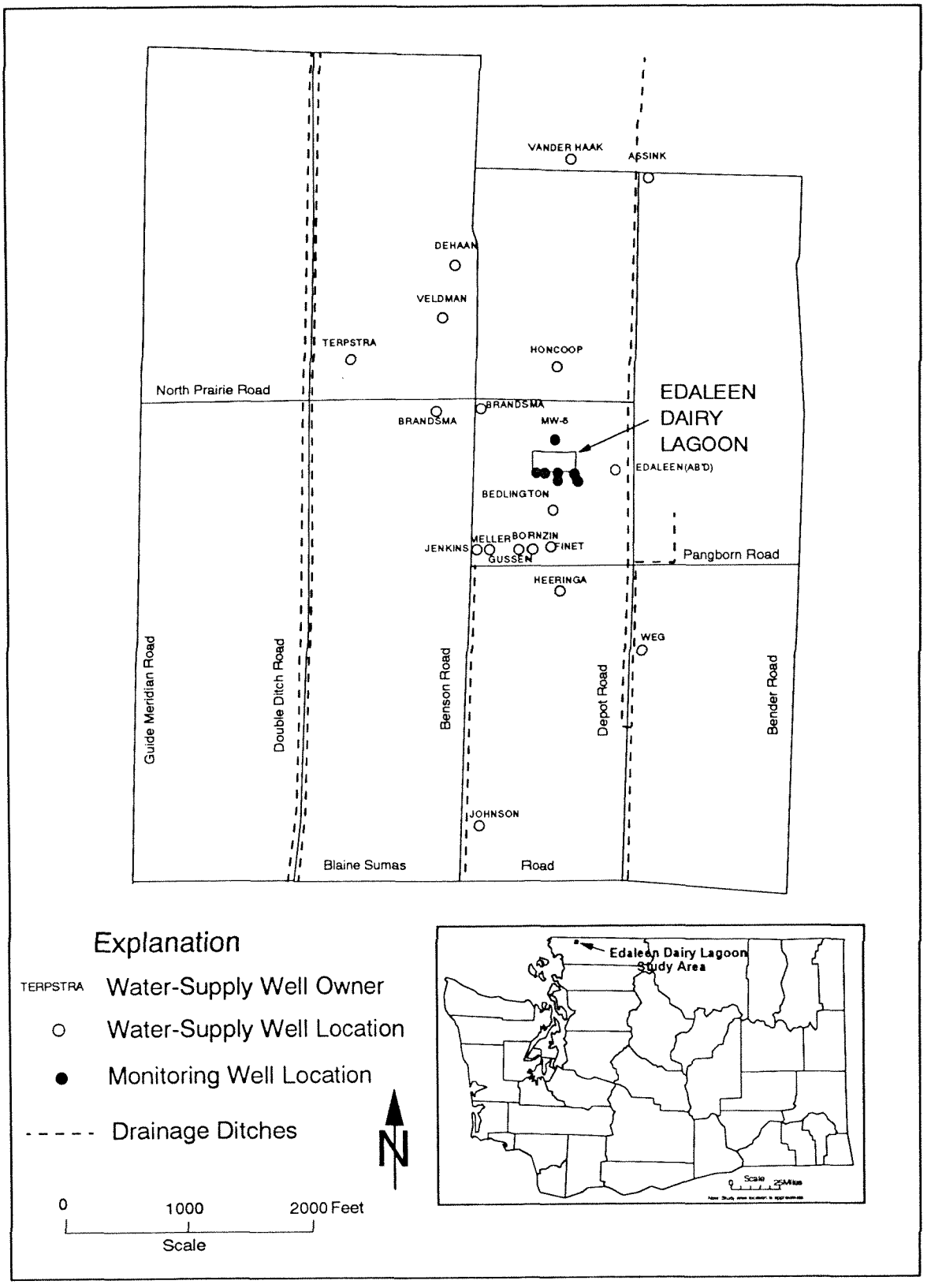

Figure 1. Edaleen Dairy Lagoon Location Map

METHODS

Well Installation

Seven monitoring wells were installed at the lagoons. Well locations are shown in Figure 2. Well construction data are summarized in Table 1. Wells were installed by driving 2-foot-long, commercial, stainless steel wellpoints and 1 1/4-inch diameter galvanized well casing to the desired depth. Well screens and casing were steam cleaned prior to use. Bentonite surface seals were installed at each well by boring an oversized hole, about six-inches in diameter, and placing hydrated 1/2-inch bentonite pellets in the annular space. Hydrated bentonite was added to the drill hole during well driving to provide a seal in the annular space and to reduce sidewall friction. As-built drawings for each of the wells are shown in Appendix A. After initial installation some wells were deepened because the water table, due to seasonal variation, dropped below the well screen. Final well depths ranged from 11.6 to 18.6 feet below ground surface. MW-6 was decommissioned because the casing broke during deepening. Replacement well, MW-6A, was not installed immediately and, as a result, water quality results are discontinuous at this location. All wells were developed until the discharge was sediment-free by pumping with a 1/3-horsepower centrifugal pump or with a one-inch diameter PVC development tool equipped with a one-way foot valve.

Table 1. Edaleen Dairy Lagoon Well Construction Summary.

Well ID	Date Installed	Initial Depth (TOC,ft)	Well Elevation (TOC)	Date Deepened	Final Depth (TOC,ft)	Well Elevation (TOC)	Well Elevation (2/27/91) (TOC)
MW-1	02/26/90	11.5	126.66	05/14/90	16.6	126.42	126.44
MW-2	02/26/90	11.5	126.26	05/14/90	14.7	125.17	125.19
MW-3	02/26/90	11.4	126.03	05/15/90	17.8	126.95	126.93
MW-4	02/27/90	11.5	125.00*	05/15/90	14.5	124.12	124.13
MW-5	02/27/90	11.6	124.96	NA	NA	124.96	124.84
MW-6	02/27/90	11.8	125.93	05/15/90	DC'd	NA	NA
MW-6A	07/30/90	14.4	126.33	11/28/90	17.8	125.64	125.64
MW-7A	11/28/90	20.6	125.97	NA	NA	125.97	125.97

NA= Not Applicable
TOC= Top of Casing
DC'd= Well Decommissioned

* Arbitrary Datum, Approximately Mean Sea Level

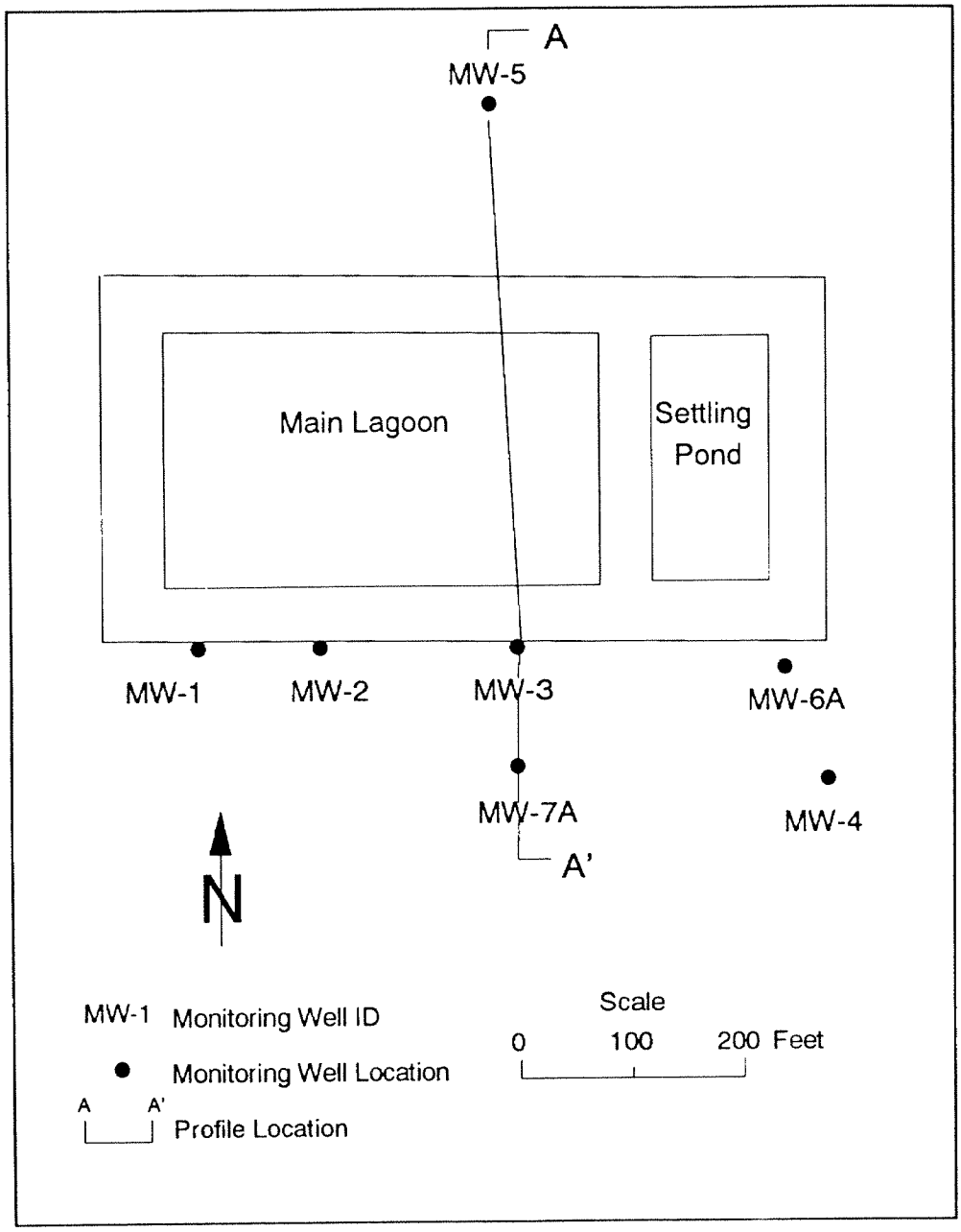

Figure 2. Edaleen Dairy Lagoon Monitoring Well Locations

Relative elevations of monitoring wells were measured using a surveying level and rod. Wells were surveyed three times: after initial well installation, after the wells were deepened, and in the spring of 1991 to verify that measuring points had not been changed due to frost heaving.

Sampling and Analysis

Wells were sampled monthly and the lagoon was sampled quarterly from February 1990 to February 1991. The well samples were tested for ammonia-N, nitrate+nitrite-N, total phosphate, total organic carbon (TOC), chemical oxygen demand (COD), total dissolved solids (TDS), chloride, and total and fecal coliform bacteria. Total persulfate nitrogen (TPN) was tested beginning November 1990. Lagoon samples were tested for the same parameters with the addition of total suspended solids. The parameters tested, test methods, and method detection limits are listed in Table 2.

Wells were purged and sampled using a peristaltic pump attached to dedicated 1/2-inch ID polyethylene tubing. Flexible silastic tubing was used at the peristaltic pump head. Prior to sampling, all wells were purged until a minimum of three well volumes had been removed and specific conductance, pH, and temperature measurements stabilized. Grab samples from the lagoon were obtained just below the wastewater surface. All samples were stored in coolers at 4°C immediately after they were obtained, and until they were transported to the laboratory. Analyses were conducted either at the Ecology/EPA Region 10 Laboratory in Manchester, Washington, or by a contract laboratory.

Quality Assurance

In addition to calibration standards, spikes, and laboratory duplicates, field quality assurance samples consisted of blind duplicates and TOC transport blanks. Quality assurance results are listed in Table 3. A blind duplicate sample, used to estimate analytical precision, was obtained for each parameter during each sampling event. Relative percent differences (RPDs), (the ratio of the difference of duplicate results and their mean), for duplicate samples are shown in Table 3.

The quality of most of the data is good. RPDs are generally less than 15 percent for most parameters. Data requiring qualification are discussed below.

RPD's for COD (0 to 93%) and TOC (1 to 98%) were highly variable. The cause of this wide variation is unknown; consequently, the time series data for COD and TOC are considered approximate. In addition, TOC transport blanks were tested for six of the sampling events. The concentrations ranged from 0.2 to 0.8 mg/L with a mean of 0.4 mg/L. Concentrations less than 2.0 mg/L (five times the transport blank concentration) are qualified with a "B".

Nitrate+nitrite-N results for the April 10, 1990, sampling show an RPD of 175%. This result is probably due to laboratory error for that specific sample, and is not considered representative of laboratory precision based on quality assurance results of other sampling events.

Table 2. Edaleen Dairy Lagoon Parameters, Test Methods, and Method Detection Limits.

Parameter	Method of Analysis	Reference	Detection Limit
Water Level	Electric Well Probe	NA	0.01 feet
pH	Beckman pH Meter	NA	0.1 Std Units
Specific Conductance	YSI Conductance Meter	NA	10 μmhos/cm
Temperature	Beckman Temperature Probe	NA	0.1 °C
Ammonia-N	EPA Method 350.1	EPA (1983)	0.01 mg/L
Nitrate+Nitrite-N	EPA Method 353.2	EPA (1983)	0.01 mg/L
Total Phosphate-P	EPA Method 365.1	EPA (1983)	0.01 mg/L
Total Persulfate Nitrogen	EPA Method 353.2	EPA (1983)	0.1 mg/L
Chloride	Std Methods No. 429	APHA (1985)	0.1 mg/L
Total Dissolved Solids	Std Method No. 209B	APHA (1985)	10 mg/L
Total Suspended Solids	Std Method No. 205C	APHA (1985)	10 mg/L
Chemical Oxygen Demand	Std Method No. 508C	APHA (1985)	4 mg/L
Total Organic Carbon	Std Method No. 505	APHA (1985)	0.1 mg/L
Total Coliform	Std Method No. 909A	APHA (1985)	1/100 mL
Fecal Coliform	Std Method No. 909C	APHA (1985)	1/100 mL

References:

American Public Health Association, 1985. Standard Methods for the examination of Water and Wastewater, 16th Edition, 1268 pgs.

EPA, 1983. Methods for Chemical Analysis of Water and Wastes, EPA-600/4-79-020 Revised March 1983.

Table 3. Edaleen Dairy Lagoon Quality Assurance Results, February 1990 to February 1991

(Units=mg/L unless specified otherwise)

	TDS	COD	TOC	Ammonia-N	NO3+NO2-N	Total Phosphate-P	Cl	Persul-N	T. Coli. (#/100ml)	F. Coli. (#/100ml)	Transport TOC
02/28/90	140	8.1	7.11	0.02	5.99	0.02	2.2	NT	3U	3U	
	127	5.1	8.38	0.01	5.91	0.04	2.2	NT	3U	3U	
RPD(%)=	9.7	45.5	16.4	66.7	1.3	66.7	0.0				
03/07/90	137	7.5	6.62	0.03	8.33	0.01U	3.85	NT	1U	1U	
	116	9.8	5.77	0.03	9.38	0.07	3.99	NT	1U	1U	
RPD(%)=	16.6	26.6	13.7	0.0	11.9		3.6				
04/10/90	145	6.5	3.07	0.02	8.82	0.01U	3.85	NT	1U	1U	
	149	7.1	3.04	0.02	0.6	0.01U	3.79	NT	1U	3U	
RPD(%)=	2.7	8.8	1.0	0.0	174.5		1.6				
05/16/90	207	6.7	9.67	0.06	2.9	0.017	12.9	NT	1U	1U	0.85
	180	10.7	15.1	0.06	2.82	0.014	14	NT	1U	1U	
RPD(%)=	14.0	46.0	43.8	0.0	2.8	19.4	8.2				
06/19/90	176	5.1	0.5U	0.054	2.49	0.013	14.3	NT	1U	1U	
	167	13.9	1.35B	0.057	2.76	0.007	14.7	NT	1U	1U	
RPD(%)=	5.2	92.6		5.4	10.3	60.0	2.8				
07/31/90	183	13.2	8.67	0.07	0.48	0.01J	20.2	NT	1U	1U	
	189	16.2	6.84	0.07	0.5	0.02J	22.1	NT	1U	1U	
RPD(%)=	3.2	20.4	23.6	0.0	4.1		9.0				
08/27/90	323	11	17.9	0.126	0.01U	0.045	42.9	NT	1U	1U	0.39
	329	13	29.4	0.125	0.01U	0.042	41.5	NT	1U	1U	
RPD(%)=	1.8	16.7	48.6	0.8		6.9	3.3				
09/25/90	390	19	18.8	0.129	0.23	0.042	2.0R	NT	1U	1U	
	460	15	18.6	0.131	0.21	0.042	1.3R	NT	1U	1U	
RPD(%)=	16.5	23.5	1.1	1.5	9.1	0.0					
10/22/90	417	22	70	0.228	0.01U	0.248	69.7	NT	1U	1U	0.26
	527	11	65.7	0.221	0.01U	0.259	68.9	NT	1U	1U	
RPD(%)=	23.3	66.7	6.3	3.1		4.3	1.2				
11/27/90	390	29	40	0.12	1.99	0.03	56.6	2.83	1UX	1U	0.16
	390	38	34.4	0.11	1.88	0.03	56.1	2.77	1UX	1U	
RPD(%)=	0.0	26.9	15.1	8.7	5.7	0.0	0.9	2.1			
12/18/90	311	38	7.9	0.217	11.6	0.034	13.6	11.1	OHT	OHT	
	326	35	7.31	0.219	11.4	0.035	13	11.3	OHT	OHT	
RPD(%)=	4.7	8.2	7.8	0.9	1.7	2.9	4.5	1.8			
01/22/91	384	10U	13.2	0.206	24.9	0.005U	14.1	27	1U	1U	0.33
	380	10U	38.7	0.241	24.4	0.005U	13.5	26.2	1U	1U	
RPD(%)=	1.0		98.3	15.7	2.0		4.3	3.0			
02/26/91	474	10U	22.2	0.146	0.231	0.021	21.4	0.62	1U	1U	0.47
	476	10U	14.3	0.159	0.228	0.015	21.8	0.53	1U	1U	
RPD(%)=	0.4		43.3	8.5	1.3	33.3	1.9	15.7			

NT= Not Tested
RPD(%)= Relative Percent Difference of the Mean
OHT= Over Holding Time
R= Data rejected.
U= Analyte not detected at the limit specified
B= Analyte detected in transport blank.

Nitrate+nitrite-N data are estimated for two sampling events (December 18, 1990, and January 22, 1991) because the laboratory did not use a nitrite (NO_2) standard. Values are flagged with a "J" as estimated values.

Samples were tested for total persulfate nitrogen (TPN) beginning in November 1990. TPN results should represent the total of organic and inorganic (ammonia-N and nitrate+nitrite-N) nitrogen. In general, TPN results should correspond to and be less than the sum of nitrate+nitrite-N and ammonia-N results. For the first sampling, the correspondence is generally good, however, in subsequent sampling events the correspondence is poor and inconsistent. The cause of the inconsistency is unknown. There are insufficient reliable TPN data to discuss concentration variations over time.

Total phosphate-P data for the July 31 through August 1, 1990, sampling event are estimated because of interferences and are flagged with a "J" as estimated values.

Chloride results for one sampling event (September 25, 1990) were inconsistent compared to previous and subsequent chloride results, TDS results, and field specific conductance readings. The cause of the inconsistency could not be identified, therefore chloride data for this sampling event are not reported.

Bacteriological samples for the December sampling exceeded the 30-hour holding time and results are not reported.

RESULTS

Hydraulic Conditions

The relationship of the lagoon to the site hydrogeology and monitoring wells is shown in a north-south hydrogeologic profile (Figure 3). Hydrographs for water levels from the lagoon and wells MW-3, MW-4, and MW-5 are shown in Figure 4. The seasonal fluctuation of the water table ranged about eight feet during the monitoring period. The fluid level in the lagoons, largely controlled by wastewater production and land application, coincidentally mimics fluctuations of the local ground water table, that is, low in the summer and high in the winter. The horizontal hydraulic gradient remained fairly constant ranging from 0.0024 to 0.0041 feet/feet (estimated by the difference between hydrographs for MW-5 and MW-3). An anomalous gradient was observed July 31, 1990, which was probably due to either irrigation near the upgradient well, MW-5, or an inaccurate water level reading at MW-5. The hydraulic potential of the lagoon is perennially higher than the local water table. Therefore, the potential for downward migration of contaminants exists throughout the year.

A water-table contour map for February 28, 1990, prior to initial use of the lagoons, is shown in Figure 5. Based on this figure the ground water flow direction is toward the south-southeast. In comparison, Figure 6 shows the water-table contour map for February 26, 1991, about one

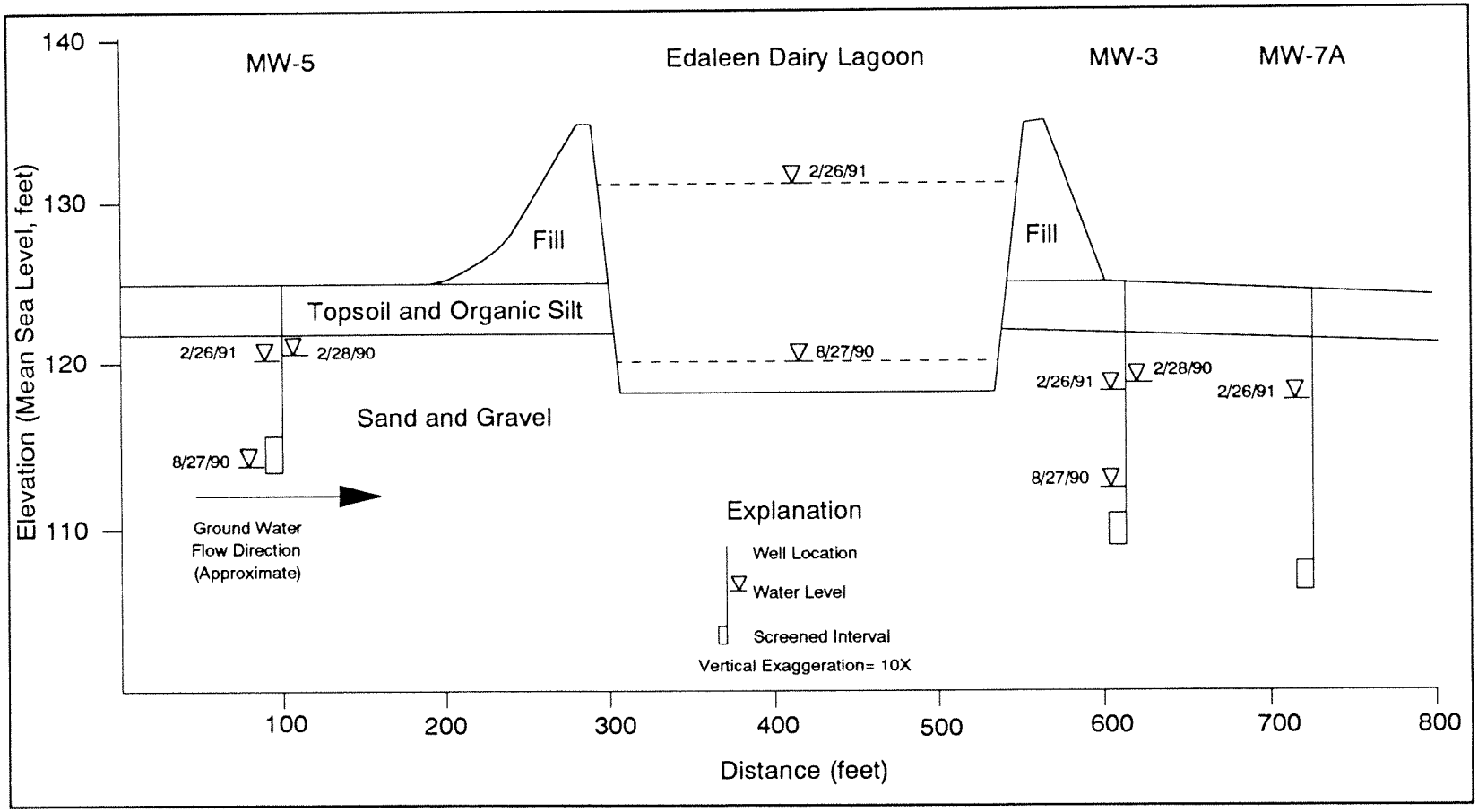

Figure 3. Edaleen Dairy Lagoon North-South Hydrogeologic Profile

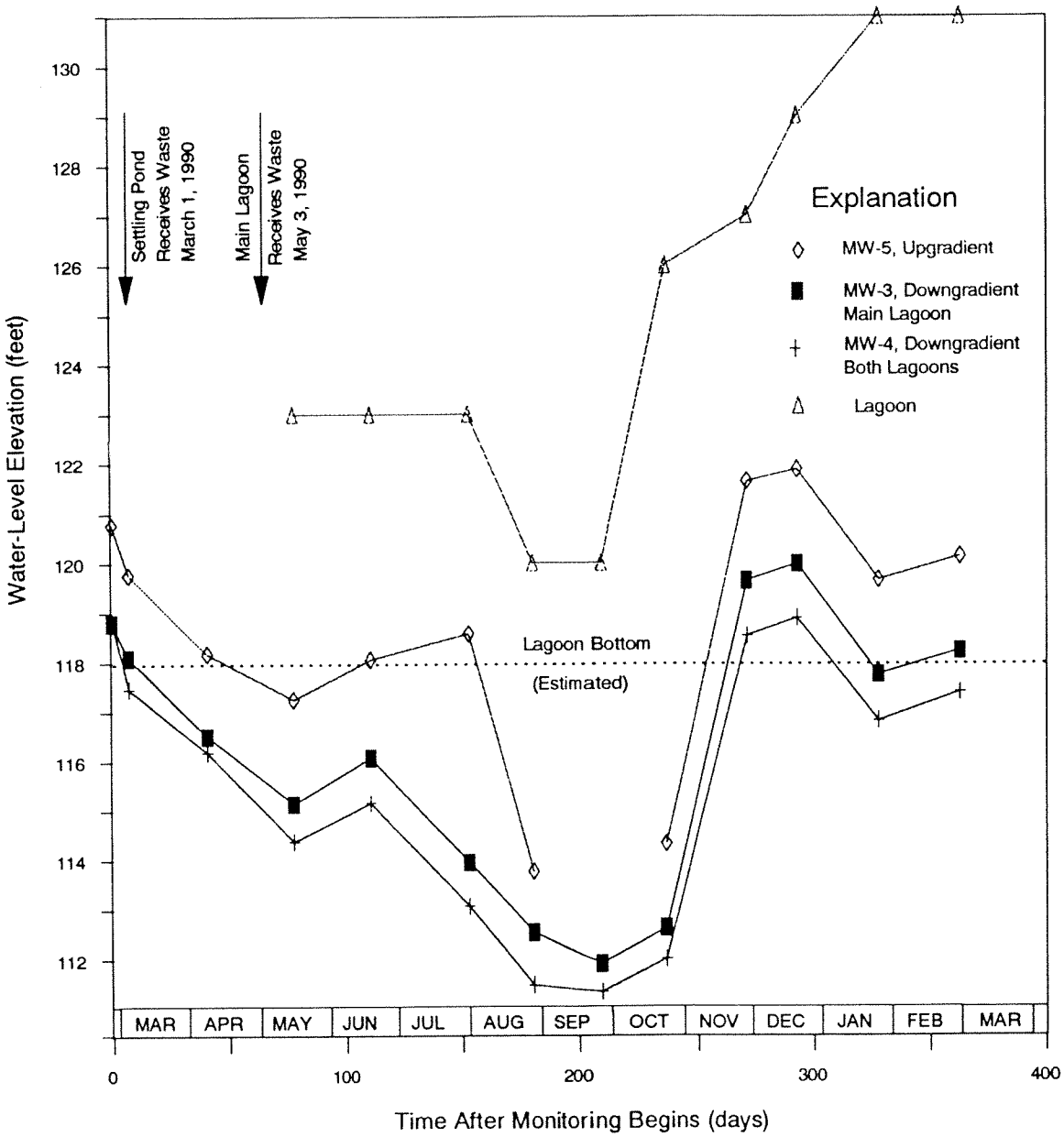

Figure 4. Edaleen Dairy Lagoon, Hydrographs for MW-3, MW-4, MW-5 and the Main Lagoon

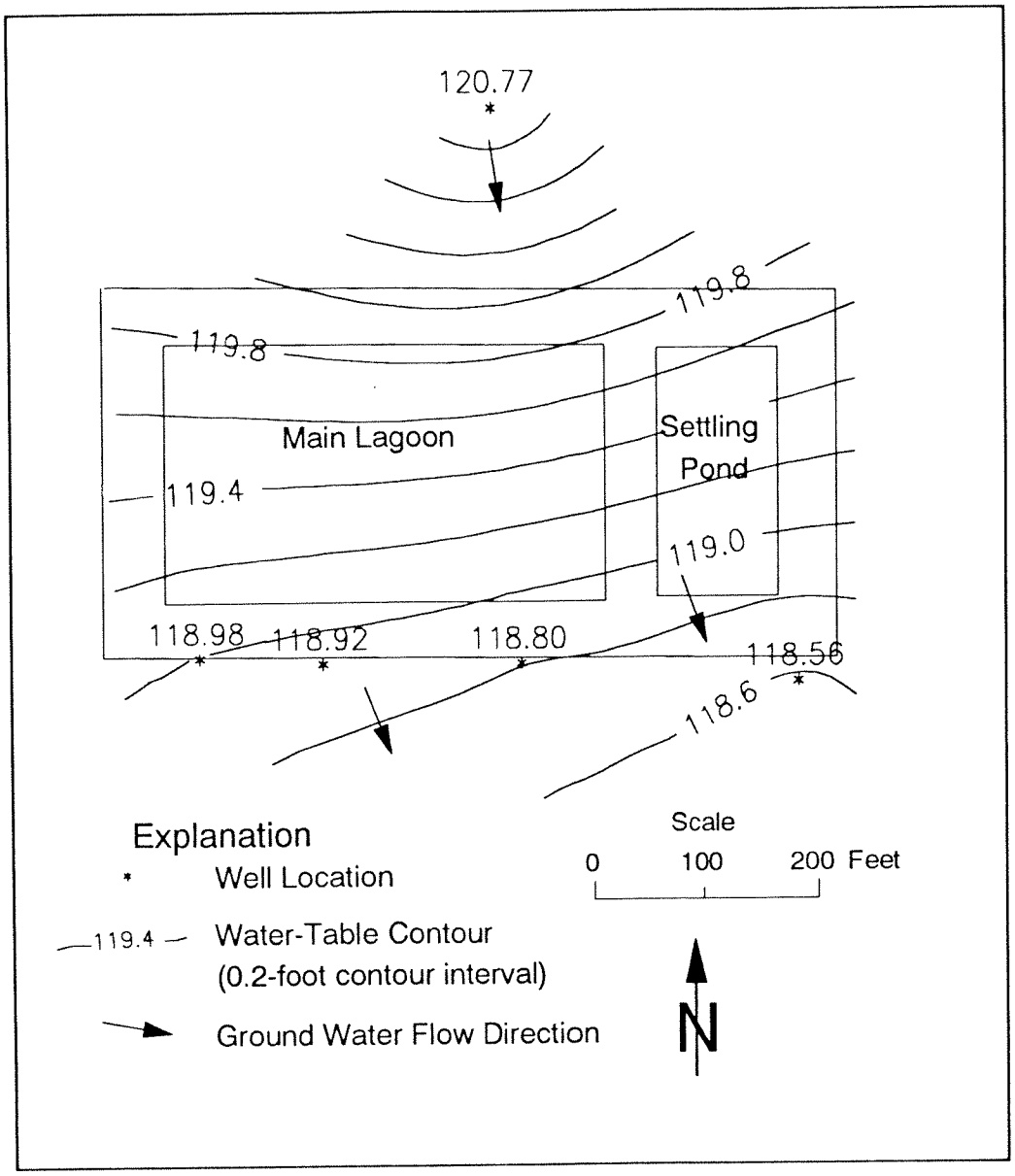

Figure 5. Edaleen Dairy Lagoon Water-Table Contour Map February 28, 1990

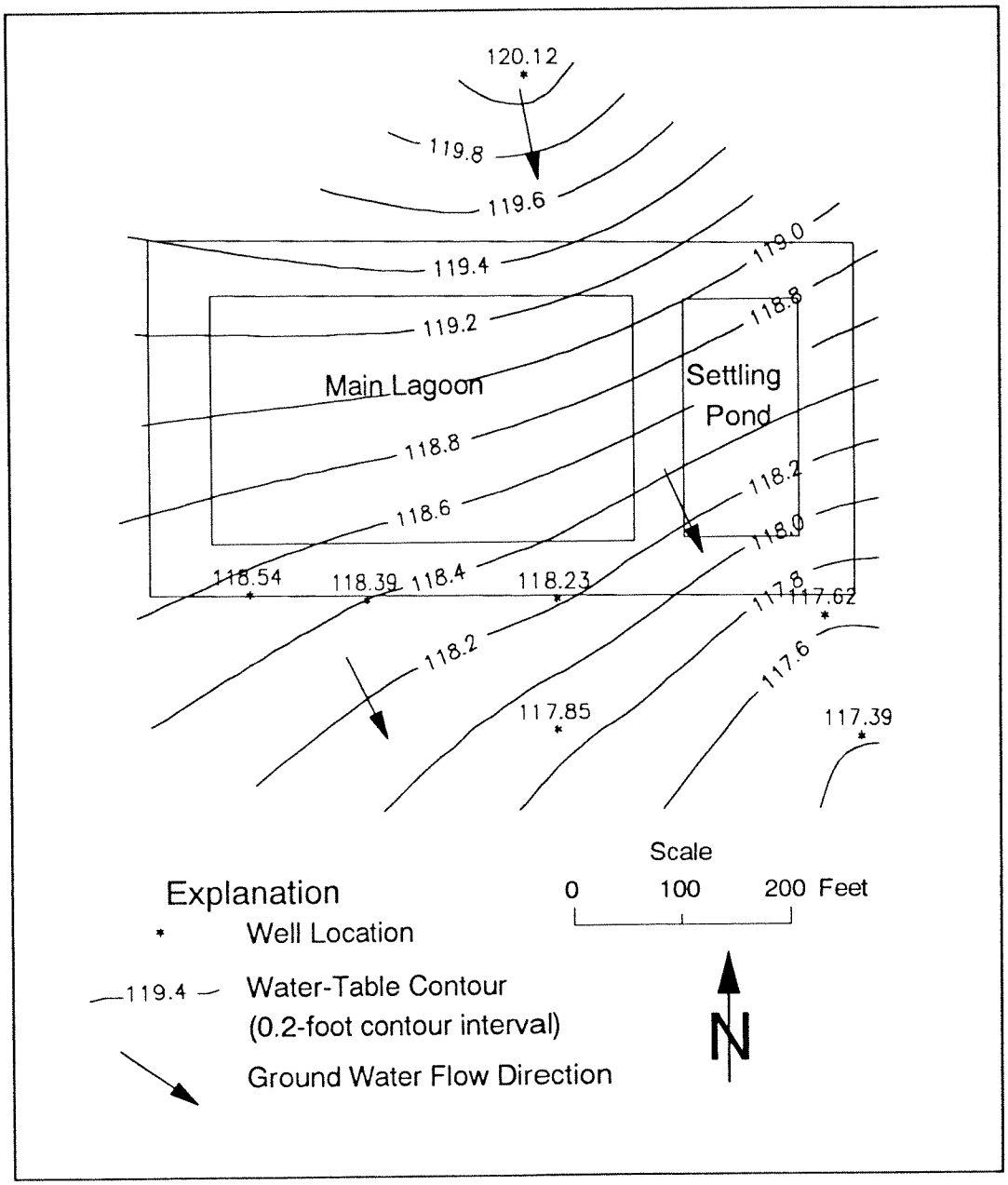

Figure 6. Edaleen Dairy Lagoon Water-Table Contour Map February 26, 1991

year after the settling pond was filled. The ground water flow direction is still toward the south-southeast, but with a slightly stronger eastward component than in 1990. Water-table contours do not appear to be locally raised (mounded) as would be expected if substantial leakage from the lagoon were occurring.

The *insitu* hydraulic conductivity could not be tested at on-site monitoring wells because these wells were too small to stress the highly transmissive outwash aquifer. Therefore, hydraulic conductivity was estimated by using specific capacity data (the ratio of well discharge rate to drawdown) and the method described by Bradbury and Rothschild (1985). This method is an iterative solution to the Theis equation with modifications for partial penetration and well loss. The results obtained are approximate. Specific capacity and well construction information were available from well records for eight wells within one mile of the site. Specific yield was assumed to be 0.25 and no corrections were made for well loss. The input data and results are listed in Table 4. Based on this method, hydraulic conductivities for the eight wells ranged from about 50 to 5000 feet per day with an arithmetic mean of 890 feet per day and a geometric mean of 280 feet per day. Because hydraulic conductivity is generally considered to be log-normally distributed, the geometric mean is considered a more reliable estimate (Freeze, 1986).

Ground water travel time can be estimated using Darcy's Law:

where,

$$v = \frac{K_h \times \frac{dh}{dL}}{n_e}$$

v	=	estimated linear velocity
dh/dL	=	hydraulic gradient
K_h	=	saturated hydraulic conductivity
n_e	=	effective porosity

Because the aquifer is unconfined and consists of unconsolidated sand and gravel, effective porosity was assumed to range between 0.10 and 0.35. The input data for calculating an expected range of ground water flow velocities are shown in Table 5. The estimated average linear ground water flow velocity ranges between 0.3 to 450 feet per day. The best estimate, based on the mean hydraulic conductivity value (280 ft/day), average hydraulic gradient (0.0040), and effective porosity (0.25), is about five feet per day.

Water Quality

Field parameter results for pH, specific conductance, and temperature are shown in Table 6. Only those results after the parameters had stabilized are reported.

Table 4. Edaleen Dairy Lagoon, Well Specific Capacity Data and Hydraulic Conductivity Results.

Well ID	Well Diameter (inches)	Static Water Level (feet)	Test Depth to Water (feet)	Test Duration (hours)	Discharge Rate, Q (gpm)	Aquifer Thickness (feet)	Screened Interval (feet)	Estimated Storage Coefficient	Well Loss	Hydraulic Conductivity (feet/day)
33Q1	8	4	19	1	400	>36	15.5	0.25	1	222
33M1	6	16.8	19.8	1	40	>16	5	0.25	1	273
05R1	8	8	8.25	5	26	>10	Estimated 1	0.25	1	5350
05E1	36	4	6.5	1	170	>29	Estimated 3	0.25	1	747
06G01	36	4	14	2	120	>19	19	0.25	1	57.4
07M01	8	10	18	1	50	>15	5	0.25	1	112
08K01, Weg	36	4	13	1	450	>26	21	0.25	1	244
08K02	36	4	11	1	85	>17	Estimated 3	0.25	1	109
									Arithmetic Mean=	889
									Geometric Mean=	283

Table 5. Edaleen Dairy Lagoon, Estimated Ground Water Velocity.

	Hydraulic Conductivity (ft/day)	Hydraulic Gradient (ft/ft)	Effective Porosity	Average Linear Velocity (ft/day)
Minimum	50	0.0024	0.35	0.342857
Maximum	5000	0.0091	0.1	455
Best Estimate	280	0.004	0.25	4.48

The laboratory water quality results are shown in Table 7. Wastewater concentrations for chloride (139 to 148 mg/L), TDS (2900 to 4100 mg/L), TOC (1310 to 2280 mg/L), COD (1300 to 7070 mg/L), ammonia-N (275 to 508 mg/L), total phosphate-P (26 to 89 mg/L), total coliform bacteria (440,000 to 8,600,000 organisms/100mL) and fecal coliform bacteria (230,000 to 5,800,000 organisms/100mL) are substantially higher than background and pre-lagoon-use concentrations.

Time series results for chloride, TDS, TOC, COD, ammonia-N, nitrate+nitrite-N and total phosphate-P are plotted in Figures 7 through 13. Please note that TOC and COD data (Figures 9 and 10) are considered approximate because analytical precision was highly variable (see Quality Assurance).

To make these figures more readable only results for wells MW-2, MW-4, MW-5, and MW-6&6A are plotted. MW-5 represents the upgradient ground water quality. MW-2 and MW-6&6A represents ground water quality downgradient of the main lagoon and settling pond, respectively. MW-4 is downgradient of both lagoons and represents conditions at a greater distance from the lagoons than MW-2 and MW-6&6A (Figure 2). Time, on the x-axis of the figures, represents the number of days after monitoring began on February 28, 1990.

DISCUSSION

Chloride, TDS, TOC, COD, total phosphate-P, and ammonia-N concentrations substantially increased downgradient from the lagoons after receiving wastewater. In near-field, downgradient wells (MW-1, MW-2, and MW-3), concentrations began to increase within about 50 days and, with the exception of ammonia-N, continued to increase until they peaked within

Table 6. Edaleen Dairy Lagoon Field Parameter Results.

Site Name	Date	pH Std.Units	Temp (°C)	Specific Conductance (μmhos/cm)	Site Name	Date	pH Std.Units	Temp (°C)	Specific Conductance (μmhos/cm)
Lagoon 1	07/31/90	7.08	25.7	4480					
MW1	02/28/90	6.11	9.8	310	MW2	02/28/90	5.97	9.1	342
MW1	04/10/90	5.93	11.4	420	MW2	04/10/90	5.94	9.2	675
MW1	05/16/90	7.14	9.5	258	MW2	05/16/90	6.88	7.6	292
MW1	06/19/90	5.7	11.5	710	MW2	06/19/90	6.2	12.6	650
MW1	07/31/90	6.52	13.2	395	MW2	08/01/90	6.18	14.3	1100
MW1	08/27/90		14.5	1060	MW2	08/27/90		14.9	1510
MW1	09/25/90	6.55	13.7	1110	MW2	09/25/90	6.37	14.1	1370
MW1	10/22/90	6.6	13.6	980	MW2	10/22/90	6.53	13.5	1290
MW1	11/27/90	6.63	11	940	MW2	11/27/90	6.71	11.9	1280
MW1	12/18/90	7.09	11.8	940	MW2	12/18/90	7.11	11.6	1360
MW1	01/22/91	6.7	11	900	MW2	01/22/91	6.95	11.5	1000
MW1	02/26/91	6.8	11	1350	MW2	02/26/91	6.91	11.8	1440
MW3	02/28/90	5.61	8.9	227	MW4	02/28/90	6.23	8.6	162
MW3	04/10/90	5.69	9.4	650	MW4	03/07/90	6.35	6.8	220
MW3	05/16/90	7.06	7.8	228	MW4	04/10/90	6.08	10.3	290
MW3	06/19/90	5.99	10.4	650	MW4	05/16/90	7.08	11.3	285
MW3	08/01/90	6.41	13	930	MW4	06/19/90	6.2	13.4	251
MW3	08/27/90		14.8	930	MW4	07/31/90	6.43	13.5	242
MW3	09/25/90	6.5	14.1	1210	MW4	08/27/90		15	400
MW3	10/22/90	6.59	13.8	820	MW4	09/25/90	5.85	13.6	490
MW3	11/27/90	6.28	13.8	680	MW4	10/22/90	5.72	12.5	477
MW3	12/18/90	6.75	12.3	820	MW4	11/27/90	6.24	11	620
MW3	01/22/91	6.54	12.5	1700	MW4	12/18/90	6.56	9.3	490
MW3	02/26/91	6.93	12	940	MW4	01/22/91	6.16	6.8	345
					MW4	02/26/91	6.18	8.1	458
MW5	02/28/90	6.02	9	202	MW6	02/28/90	6.72	10.5	1000
MW5	03/07/90	6.26	7	220	MW6	03/07/90	7.02	7.5	1000
MW5	04/10/90	6.09	9.2	248	MW6	04/10/90	6.56	9.1	1000
MW5	05/16/90	7.07	8.6	210	MW6	08/01/90	6.32	12.9	
MW5	06/19/90	6.14	11.2	175	MW6	11/27/90	6.48	11.8	1230
MW5	07/31/90	6.26	12.1	140	MW6	12/18/90	7.22	8.1	1230
MW5	10/22/90	6.65	12.7	172	MW6	01/22/91	6.98	11.5	1100
MW5	11/27/90	6.69	10	480	MW6	02/26/91	6.91	12.2	1000
MW5	12/18/90	6.25	8.5	920	MW7	12/18/90	7.06	8.4	770
MW5	01/22/91	8.89	7.6	700	MW7	01/22/91	6.49	11.5	700
MW5	02/26/91	5.92	8.2	354	MW7	02/26/91	6.5	11.8	800

Table 7. Edaleen Dairy Lagoon Water Quality Results, February 1990 to February 1991.

Site Name	Date	TDS	Q	COD	Q	TOC	Q	Ammonia-N	Q	NO3+NO2-N	Q	TPN	Q	Tot Phos	Q	Chloride	Q	TSS	Q	Total Coliform	Q	Fecal Coliform	Q
Lagoon 1	04/10/90	2890		4400		1630		275		0.06				26		139		575		440000		230000	
Lagoon 1	07/31/90	4120		7070		2280		322		0.08				89		145		925		7400000	J	1000000	J
Lagoon 1	10/22/90	3770		1300		1620		275		0.61				71.5		148		NT		8600000		5800000	
Lagoon 1	01/22/91	3530		3100		1310		508		1.3		ND		35.4		146		1590		3300000		2100000	
MW1	02/28/90	411		10		13.8		0.05		8.45				0.12		5.8				ND		ND	
MW1	04/10/90	226		6.8		29.6		0.05		7.62				0.01		8.1				ND		ND	
MW1	05/16/90	201		12.4		6.1		0.04		2.17				0.09		13.8				1		ND	
MW1	06/19/90	680		449		95		0.01		0.01				0.04		51.2				ND		ND	
MW1	07/31/90	318		88		38		ND		ND				0.05		24.9				ND		ND	
MW1	08/27/90	1040		578		225		0.02		0.11				0.16		84.8				ND		ND	
MW1	09/25/90	980		650		244		2.83		0.05				0.12						ND		ND	
MW1	10/22/90	864		255		175		11.4		0.1				0.26		60.8				ND		ND	
MW1	11/27/90	710		160		61		7.5		ND		10.3		0.02		67.4				ND		ND	
MW1	12/18/90	505		120		42		9.67		0.2		3.6		0.1		40.3				OHT		OHT	
MW1	01/22/91	613		120		202		31.2		0.04		11.4		0.12		52.5				ND		ND	
MW1	02/26/91	941		260		140		52.2		0.1		3.72		0.03		80.2				ND		ND	
MW2	02/28/90	245		8.4		27		0.05		15.8				0.01		10.8				ND		ND	
MW2	04/10/90	413		10.3		2.3		0.2		38.2				0.01		14.8				ND		ND	
MW2	05/16/90	196		76.3		29		0.02		1.41				0.06		19.6				ND		ND	
MW2	06/19/90	495		196		39		0.01		0.18				0.1		48.4				ND		ND	
MW2	08/01/90	730		340		133		0.02		ND				0.03		54.1				ND		ND	
MW2	08/27/90	1640		1064		429		1.76		ND				0.13		111				ND		ND	
MW2	09/25/90	1300		800		304		7.58		0.02				0.14						ND		ND	
MW2	10/22/90	1200		120		217		8.35		ND				0.27		89.8				ND		ND	
MW2	11/27/90	1140		240		93		30.9		ND		31.8		0.06		72.9				ND	X	ND	
MW2	12/18/90	1060		300		100		59.1		0.16		13.9		0.28		81.3				OHT		OHT	
MW2	01/22/91	536		120		85		70.9		0.04		20.6		0.16		35.7				148	J	7	
MW2	02/26/91	822		176		89		102		0.14		18		0.14		77.3				ND		ND	
MW3	02/28/90	184		10.1		18		0.03		13.6				0.01		16				ND		ND	
MW3	04/10/90	381		12.4		2.8		0.2		43.2				ND		16.4				ND		ND	
MW3	05/16/90	196		7.7		4.6		0.02		0.68				0.08		12.9				ND		ND	

Table 7. Edaleen Dairy Lagoon Water Quality Results (Continued).

Site Name	Date	TDS	Q	COD	Q	TOC	Q	Ammonia-N	Q	NO3+NO2-N	Q	TPN	Q	Tot Phos	Q	Chloride	Q	TSS	Q	Total Coliform	Q	Fecal Coliform	Q
MW3	06/19/90	540		189		46		0.01		0.1				0.1		56.5				ND		ND	
MW3	08/01/90	1340		870		359		89.7		ND				0.09		88.6				ND		ND	
MW3	08/27/90	911		436		201		0.31		ND				0.14		67.4				ND		ND	
MW3	09/25/90	865		365		169		24.3		0.02				0.12						ND		ND	
MW3	10/22/90	525		35		77		30.2		ND				0.28		54.1				ND		ND	
MW3	11/27/90	460		47		26		15.7		ND		15.9		0.01		58.3				OHT		OHT	
MW3	12/18/90	592		140		48		14.4		0.17		7.3		0.11		78.1				ND		ND	
MW3	01/22/91	1240		170		214		74.3		0.04		ND		0.17		121				ND		ND	
MW3	02/26/91	592		130		60		52.8		0.11		12.9		0.08		44.4				ND	X	ND	
MW4	02/28/90	140		8.1		7.1		0.02		5.99				0.02		2.2				ND		ND	
MW4	03/07/90	137		7.5		6.6		0.03		8.33				ND		3.85				ND		ND	
MW4	04/10/90	149		7.1		3.0		0.02		4.71				ND		3.79				ND		ND	
MW4	05/16/90	207		6.7		9.7		0.06		2.9				0.02		12.9				ND		ND	
MW4	06/19/90	176		5.1		ND		0.05		2.49				0.01		14.3				ND		ND	
MW4	07/31/90	183		13.2		8.7		0.07		0.48				0.01		20.2				ND		ND	
MW4	08/27/90	323		11		18		0.13		ND				0.05		42.9				ND		ND	
MW4	09/25/90	390		19		19		0.13		0.23				0.04						ND		ND	
MW4	10/22/90	417		22		70		0.23		ND				0.25		69.7				ND		ND	
MW4	11/27/90	390		29		40		0.12		1.99		2.83		0.03		56.6				ND	X	ND	
MW4	12/18/90	311		38		7.9		0.22		11.6		11.1		ND		13.6				OHT		OHT	
MW4	01/22/91	384		ND		26		0.21		24.9		27		ND		14.1				ND		ND	
MW4	02/26/91	474		ND		22		0.15		0.23		0.62		0.02		21.4				ND		ND	
MW5	02/28/90	159		6.2		6.5		0.02		7.74				0.05		4.34				NT		NT	
MW5	03/07/90	141		8.2		4.7		3.6		6.98				0.03		3.81				ND		ND	
MW5	04/10/90	138		9.3		8.4		0.06		5.92				ND		3.32				ND		ND	
MW5	05/16/90	135		11.1		8.3		0.03		3.69				0.01		11.1				ND		ND	
MW5	06/19/90	150		14.6		ND		0.01		2.48				ND		1.8				2		ND	
MW5	07/31/90	156		15.9		5.6		0.02		3.15				0.01		2.4				ND		ND	
MW5	10/22/90	155		ND		6.8		0.07		2.52				0.31		2.44				ND		ND	
MW5	11/27/90	384		ND		1.5	B	0.02		41.7		41		ND		9.3				ND		ND	
MW5	12/18/90	675		24		2.0	B	ND		80.4		89.1		ND		33.6				OHT		OHT	

Table 7. Edaleen Dairy Lagoon Water Quality Results (Continued).

Site Name	Date	TDS	Q	COD	Q	TOC	Q	Ammonia-N	Q	NO3+NO2-N	Q	TPN	Q	Tot Phos	Q	Chloride	Q	TSS	Q	Total Coliform	Q	Fecal Coliform	Q
MW5	01/22/91	744		ND		4.0		ND		98.7		175		ND		46.7				ND		ND	
MW5	02/26/91	385		ND		4.7		0.012		42.8		42.2		0.011		22.9				ND		ND	
MW6	02/28/90	781		103		93		28.5		ND				0.01		49				ND		ND	
MW6	03/07/90	937		135		112		33.2		0.02				0.01		54.8							
MW6	04/10/90	645		79.9		27		13.9		ND				0.01		37.5				ND		ND	
MW6A	08/01/90	1110		533		236		0.09		ND				0.06		87.6				ND		ND	
MW6A	11/27/90	775		47		87		69.4		0.04		68.7		ND		88.9				ND	X	ND	
MW6A	12/18/90	803		270		72		90.8		0.21		17		0.2		68.9				OHT		OHT	
MW6A	01/22/91	547		79		57		80.8		0.03		23.4		0.08		47.1				ND		ND	
MW6A	02/26/91	580		88		32		45.6		0.01		17		0.02		50.4				ND		ND	
MW7A	12/18/90	486		64		19		0.06		0.08		ND		0.17		45.2				OHT		OHT	
MW7A	01/22/91	627		29		151		0.02		0.03		0.13		0.05		60.2				ND		ND	
MW7A	02/26/91	636		56		67		0.016		ND		2.17		0.017		72				ND		ND	

J= Estimated Value

B= Analyte detected in blank.

ND= Not detected

NT= Not tested

OHT= Over holding time.

89 to 172 days after the main lagoon received waste. Ammonia-N concentrations were still increasing in two of three near-field wells as of the last sampling event in February 1991, 299 days after the main lagoon received waste. This observation is consistent with the reported low mobility of ammonia-N in ground water (Drever, 1982). At a greater distance downgradient from the lagoons (MW-4), parameter concentrations began to increase between about 150 and 180 days after the settling pond received wastes. They continued to rise to a peak between 235 and 292 days. Concentrations of these parameters in near-field monitoring wells had not returned to pre-lagoon use levels as of the last sampling event in February 1991.

Total coliform and fecal coliform bacteria, which are present in high concentrations in the wastewater, were rarely observed in ground water samples. Only one monitoring well, MW-2, showed substantial concentrations (total coliforms at 148 organisms/100mL, January 1991). Coliform bacteria were detected in two wells, MW-2 and MW-5, at low concentrations of 1 and 2 organisms/100 ml, respectively, on two other occasions.

In contrast to the other parameters, nitrate+nitrite-N concentrations were depressed in the vicinity of the lagoons after they were used. Presumably the lower concentrations were due to denitrification, which is promoted by anaerobic conditions under which nitrate (NO_3), is reduced (denitrified) first to nitrite (NO2), then nitrogen gas. Further downgradient from the lagoons (MW-4) nitrate+nitrite-N peaked at about 25 mg/L in January 1991 but by February 1991 had returned to 0.23 mg/L. The cause of this peak is not known but is probably not related to lagoon operation.

The time series plots of contaminant concentrations observed downgradient from the lagoons suggests a single pulse contaminant source followed by a decreasing leakage rate. This result is consistent with other dairy lagoon studies as discussed previously in this report.

Ground water quality in the area also is affected by land-use practices other than the lagoon system. Upgradient (MW-5) concentrations of nitrate+nitrite-N, chloride, and TDS were elevated from December 1990 to February 1991. The cause of these increases is most likely related to land application of wastes possibly combined with heavy precipitation. Long-term monitoring is needed to differentiate time trends from "noise" like effects of other land uses and natural seasonal variations in ground water quality.

Another complication is the elevated concentrations of chloride (49 mg/L), TDS (781 mg/L), COD (103 mg/L), TOC (93 mg/L) and ammonia-N (28.5 mg/L) that were present in well MW-6 before the settling pond received wastewater. The cause of these elevated concentrations is not known.

Between November 1990 and February 1991, the water table appears to rise above the bottom of the lagoon (see Figure 4, MW-3 and MW-5 hydrographs). The water table fluctuation repeats seasonally. The effect this fluctuation may have on ground water quality is not fully known;

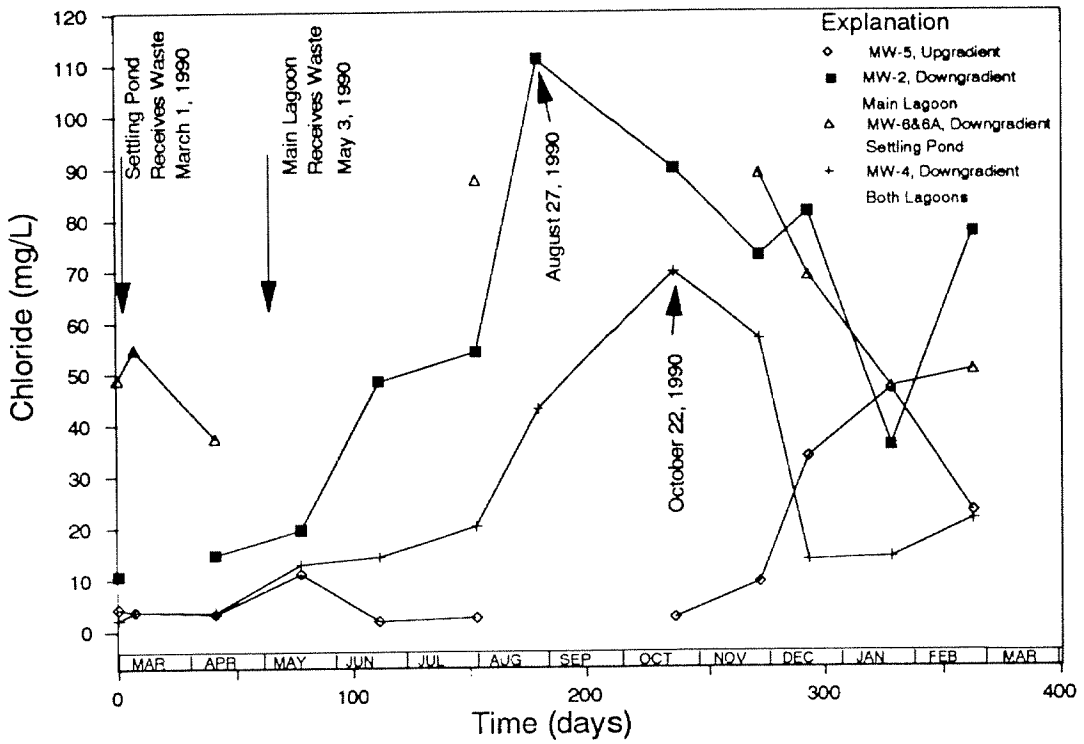

Figure 7. Edaleen Dairy Lagoon, Chloride Concentrations at Selected Wells, February 1990 to February 1991.

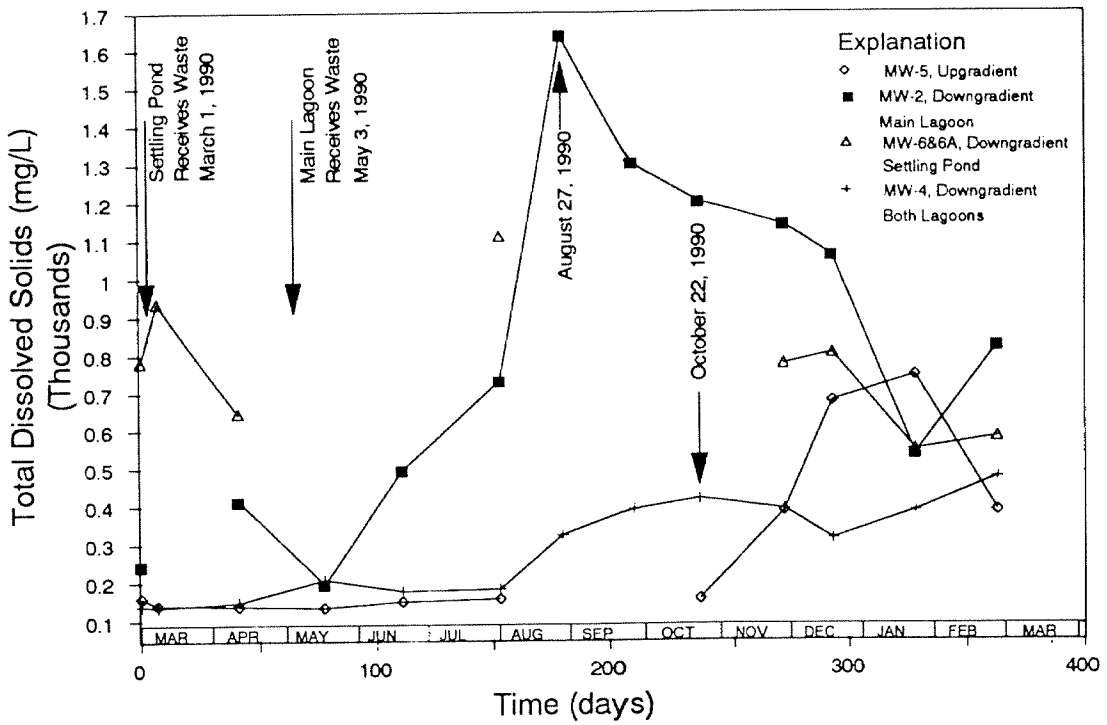

Figure 8. Edaleen Dairy Lagoon, Total Dissolved Solids Concentrations at Selected Wells, February 1990 to 1991.

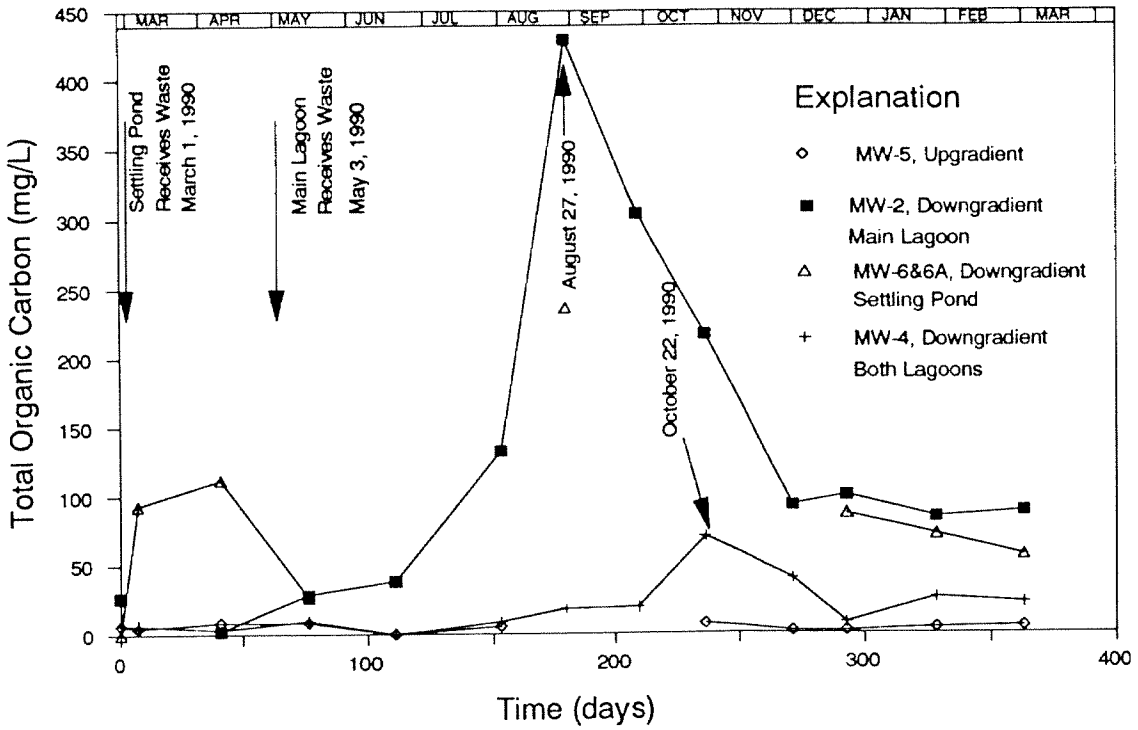

Figure 9. Edaleen Dairy Lagoon, Total Organic Carbon Concentrations in Selected Wells, February 1990 to 1991.

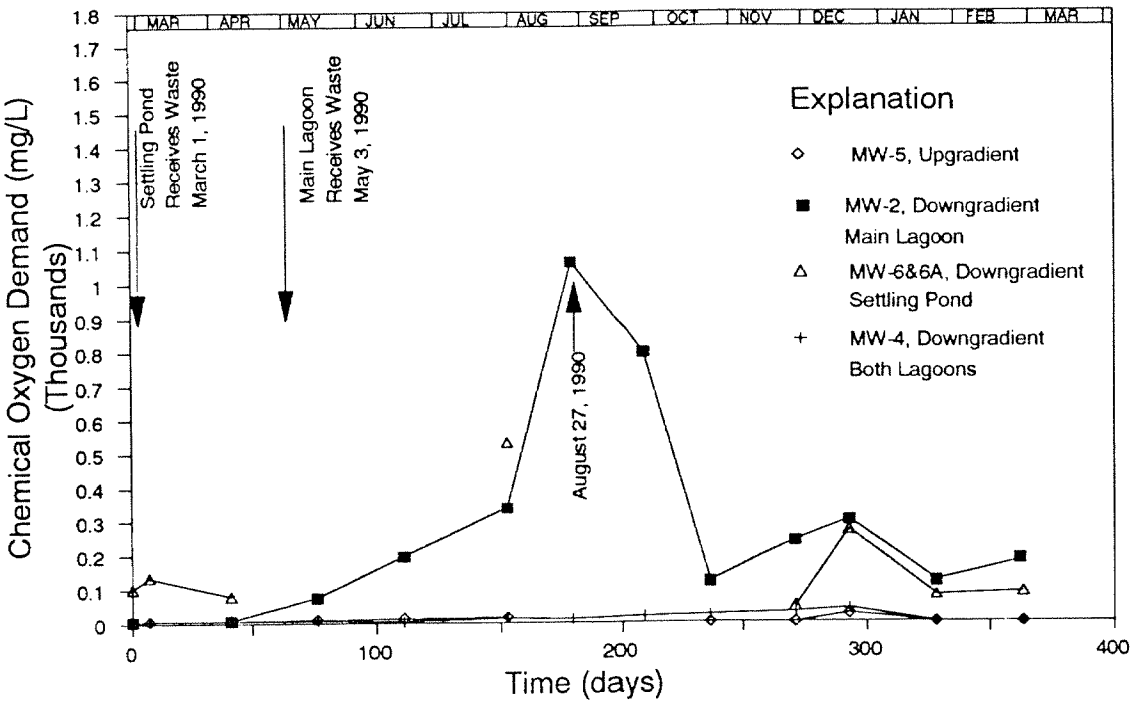

Figure 10. Edaleen Dairy Lagoon, Chemical Oxygen Demand Concentrations in Selected Wells, February 1990 to February 1991.

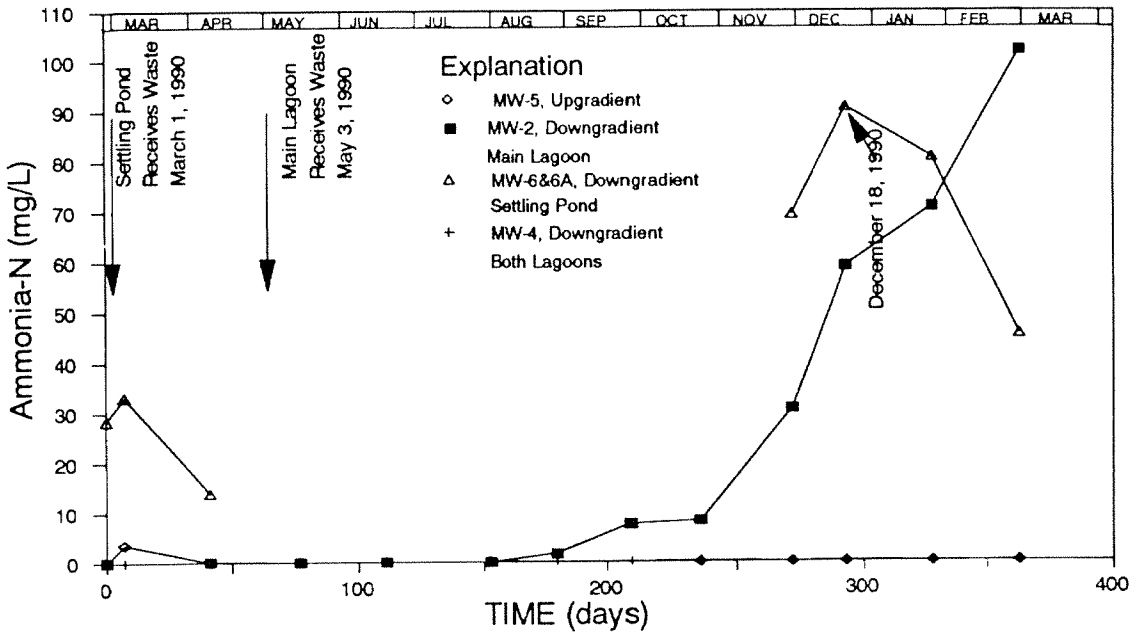

Figure 11. Edaleen Dairy Lagoon, Ammonia-N Concentrations at Selected Wells, February 1990 to February 1991.

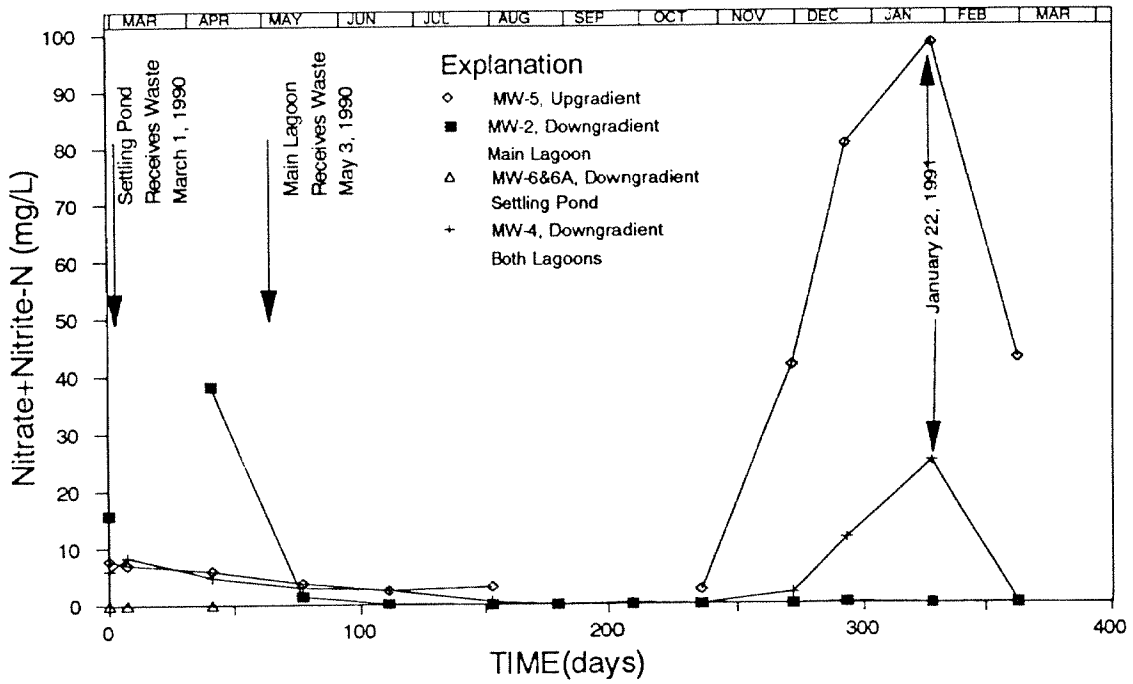

Figure 12. Edaleen Dairy Lagoon, Nitrate+Nitrite-N Concentrations at Selected Wells, February 1990 to February 1991.

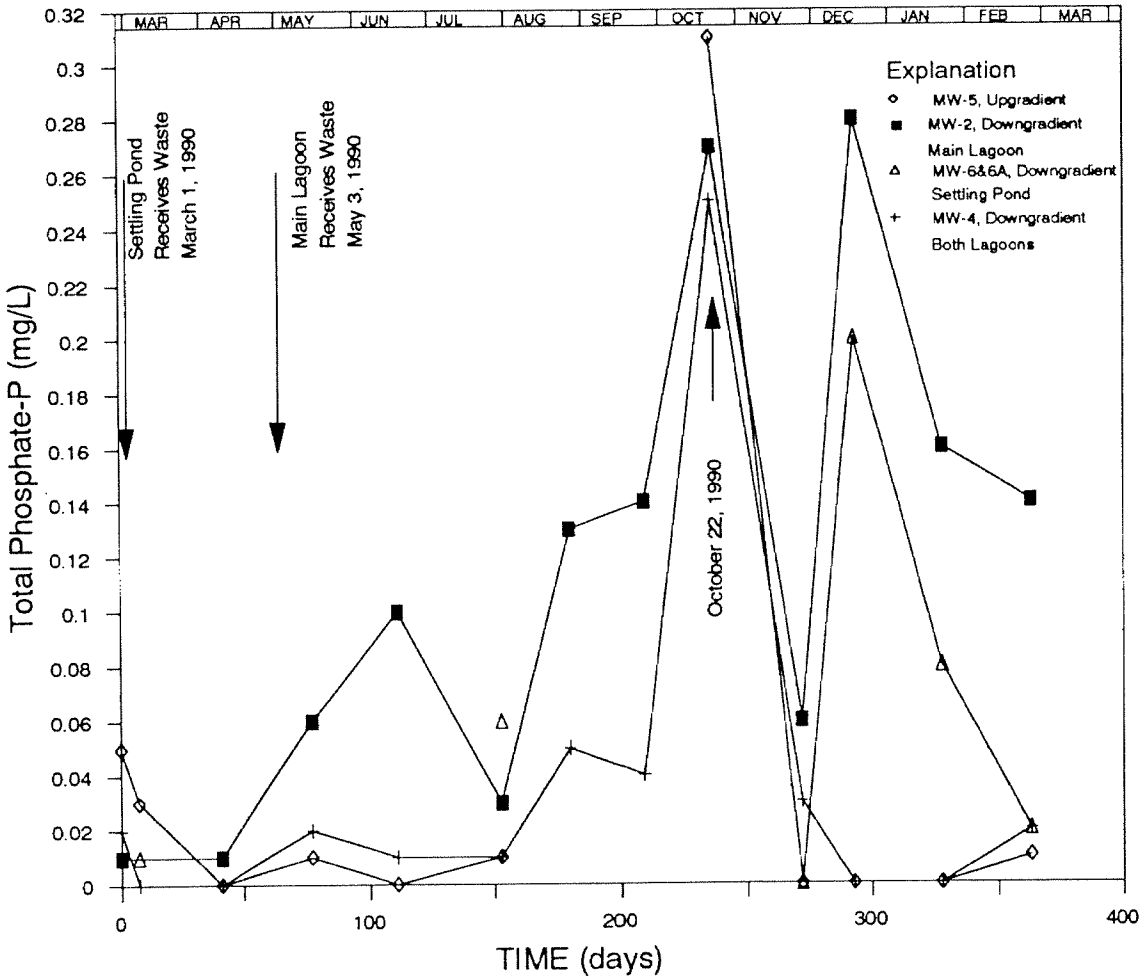

Figure 13. Edaleen Dairy Lagoon, Total Phosphate-P Concentrations in Selected Wells, February 1990 to 1991.

it is likely that direct contact with the lagoon bottom could facilitate ground water contamination. This might result in seasonal variations in source strength, which, in turn, could potentially cause a seasonal variations in downgradient water quality.

Potential Downgradient Water Quality Effects

Peak concentrations of contaminants decrease substantially with distance from the lagoons. Peak concentrations for each parameter, distances from the lagoons that the peaks were observed, and the concentration decrease with distance (expressed as the percent of the mean source concentration) are summarized in Table 8. Provisions for background concentrations are not included in these calculations. Of all parameters tested, chloride was the most conservative and decreased the least with distance from the source lagoons. In near-field wells the peak chloride concentrations decreased from 23 to 41 percent and further downgradient (MW-4), 280 feet from the lagoons, peak concentrations decreased 52 percent. Peak concentrations for all other parameters decreased between 86 and 99.6 percent at MW-4. Causes of the decreased concentrations are probably the result of a number of factors including dispersion, biological and chemical degradation, volatilization, and adsorption depending on the contaminant. Changes in chloride concentrations, for example, are primarily due to dispersion. Whereas changes in organic indicator concentrations (TOC and COD) probably are due to a combination of adsorption, biologic degradation, and dispersion.

For comparison purposes, Maximum Contaminant Levels (MCLs--drinking water standards for public systems), ground water quality standards (Chapter 173-200 WAC), and the range of background concentrations at MW-5 are also provided in Table 8.

Primary (MCLs) have been established for public drinking water supply systems for two of the parameters tested: total coliform bacteria (1 organism/100 mL) and nitrate-N (10 mg/L) (Department of Health, 1989). The die-off rate for total coliform bacteria is rapid between the lagoon and monitoring wells. Coliform bacteria were detected in only one near-field downgradient well (MW-2), at a substantial concentration (148 organisms/100mL) for one sampling event, January 1991. Coliform bacteria have not been detected in monitoring wells further downgradient from the lagoons. Nitrogen is present in the waste primarily as ammonia-N. Ammonia-N concentrations, portions of which are expected to mineralize to nitrate, were still increasing in two of the near-field wells (MW-2 and MW-3), in February 1991. Ammonia-N peaked in the other near-field well (MW-1) at a concentration of 52 mg/L. This represents about an 85 percent decrease over a distance of 182 feet from the lagoon to the well. If attenuation continued at this rate the concentration of ammonia-N would be less than 8 mg/L at a distance of 364 feet from the lagoon. However, as ammonia-N mineralizes to nitrate, the rate of attenuation is likely to decrease and higher concentrations of nitrate could occur downgradient than would be predicted using ammonia attenuation rates. Therefore, additional monitoring is needed to provide reliable estimates of expected nitrate concentrations further downgradient of the lagoons.

Table 8. Edaleen Dairy Lagoon, Peak Concentrations with Distance from Source, Drinking Water Standards and Ground Water Quality Standards.

Site ID	Distance (ft)	Chloride (mg/L)	Change (%)	TDS (mg/L)	Change (%)	TOC (mg/L)	Change (%)	COD (mg/L)	Change (%)	NH3-N (mg/L)	Change (%)	NO3+NO2-N (mg/L)	Tot Phos (mg/L)	Change (%)	Total Coliform (#/100 ml)	Change (%)	Specific Conductance (µmhos/cm)	Change (%)
Lagoon	0	145	0	3578	0	1710	0	3968	0	345	0	0.5	56	0	4935000	0	4480	0
MW-1	182	85	41	1040	71	244	86	650	84	52	85	NA	0.26	99.5	NA	NA	1110	75.2
MW-2	190	111	23	1640	54	429	75	1064	73	102(?)	NA	NA	0.28	99.5	148	99.997	1510	66.3
MW-3	190	89	39	1340	63	359	79	870	78	90(?)	NA	NA	0.28	99.5	NA	NA	1210(?)	NA
MW-4	280	70	52	417	88	70	96	38	99	NA	NA	NA	0.25	99.6	NA	NA	620	86.2
Background Range (MW-5)	NA	1.8-46.7		135-744		ND-8.4		ND-24		ND-3.6		2.5-99	ND-0.31		ND-2		172-920	
Water Quality Standards																		
Primary MCL (Department of Health, 1989)	NA	None		None		None		None		None		10	None		1		None	
Secondary MCL (Department of Health, 1989)	NA	250		500		None		None		None		None	None		None		700	
Ground Water Quality Standards (Chapter 173-200 WAC)	NA	250		500		None		None		None		10	None		1		None	

NA= Not applicable.

ND= Not Detected.

MCL= Maximum Contaminant Level.

Secondary MCLs have been established for public drinking water systems for three of the parameters tested: specific conductance (700 micromhos/cm), TDS (500 mg/L), and chloride (250 mg/L). Secondary MCLs are established based on aesthetics such as taste, odor or discoloration rather than health-based criteria. Specific conductance measurements and TDS concentrations exceeded the Secondary MCL at near-field monitoring wells, but at MW-4 (280 feet downgradient from the lagoons), peak concentrations were less than the Secondary MCLs. Chloride concentrations in the wastewater were less than the Secondary MCL.

The closest downgradient water-supply well used for drinking water is located about 1400 feet from the lagoons (Figure 1). Results shown in Table 8 suggest that most likely there would be little affect on ground water quality at that distance.

Ground Water Velocities Using Chloride Data

Ground water velocities can be estimated using time series chloride data from the monitoring wells. Chloride is considered an excellent tracer for ground water movement because it is highly soluble and moves through the subsurface with little or no attenuation (Davis and DeWiest, 1966; Freeze and Cherry, 1979). Also, it is present in the waste at concentrations substantially higher than those of upgradient ground water. Velocities are estimated by dividing the distance from the source to the monitoring well by the time it takes chloride to reach the monitoring well. Two approaches are used: 1) first arrival times; and 2) peak arrival times. First arrival travel times are calculated by dividing the distance from the source (the lagoon edge) to the well. Peak arrival times are calculated using the distance from the monitoring well to the center of the lagoon. Peak arrival times are considered to be more accurate because there is less subjectivity in identifying arrival time. Results are summarized in Table 9. Based on chloride data the ground water velocities range between 0.8 to 2.1 feet/day. This rate agrees closely with the best estimate velocities from Darcy's Law, about 5 feet/day. Velocities based

Table 9. Edaleen Dairy Lagoon, Chloride Travel Times and Rates.

Well ID	First Arrival Time (days)	Distance From Edge of Source (feet)	First Arrival Travel Rate (feet/day)	Peak Arrival Time (days)	Distance From Center of Source (feet)	Peak Concentration (mg/L)	Peak Travel Rate (feet/day)
MW-1	47	44	0.93617021	116	182	84.8	1.5689655
MW-2	47	52	1.10638298	116	190	111	1.637931
MW-3	47	52	1.10638298	89	190	88.6	2.1348315
MW-4	179	140	0.78212291	235	280	69.7	1.1914894

on chloride travel times are considered more reliable than the hydraulically determined velocities, since they are generated from site-specific information rather than hydraulic conductivity values averaged for wells within a one mile radius.

CONCLUSIONS AND RECOMMENDATIONS

Conclusions from the first year of monitoring at the Edaleen Dairy Lagoon are listed as follows:

1. Ground water immediately downgradient of the newly constructed and filled lagoons shows elevated concentrations of chloride, total dissolved solids, total organic carbon, chemical oxygen demand, total phosphate-P, ammonia-N, and to a lesser extent, coliform bacteria.

2. Concentrations of chloride, total dissolved solids, total organic carbon, chemical oxygen demand, and total phosphate-P increased to maxima, usually three to four months after the main lagoon received waste, and then decreased. At the end of the monitoring period, 299 days after the main lagoon received waste, concentrations in near-field wells had not returned to pre-disposal levels. These observations are characteristic of a pulse contaminant source. They are consistent with previous studies of dairy lagoons that show initial high leakage rates that decrease with time.

3. Ammonia-N concentrations were still increasing in two of three near-field wells downgradient of the main lagoon in February 1991, 299 days after receiving wastes. Downgradient of the settling pond, ammonia-N concentrations peaked at 90.8 mg/L in December 1990, 292 days after receiving wastes. The slower migration rates of ammonia-N are consistent with previous studies.

4. Nitrate+nitrite-N concentrations decreased in monitoring wells immediately downgradient of the lagoons probably due to denitrification in the ground water as it was influenced by leakage from the lagoons.

5. Peak concentrations of contaminants decrease with distance from the lagoons. The decrease is probably due to a number of factors including dispersion, adsorption, biologic and chemical degradation, and volatilization, depending on the contaminant.

6. Ground water velocities based on Darcy's Law and chloride time series concentrations are 4 to 5 ft/day and 0.8 to 2.1 ft/day, respectively. The travel time based on chloride data is considered more reliable.

Recommendations based on the first year of monitoring are listed as follows:

1. Quarterly monitoring of on-site wells and the lagoon should continue. These data should be evaluated to determine if concentrations decrease to pre-lagoon-use levels and to determine more reliable estimates of downgradient ammonia-N and nitrate+nitrite-N concentrations. Resources do not exist at Environmental

Investigations to continue the monitoring so additional resources need to be identified.

2. Monitoring at nearby off-site water-supply wells should also continue. To date Ecology's Northwest Regional Office (NWRO) has obtained periodic water level measurements and water quality samples from about seven local private water-supply wells. Resources should be dedicated to enable NWRO to continue this monitoring.

3. SCS should conduct a final review of the lagoon construction to determine if it meets their standards.

4. The total persulfate nitrogen (TPN) test results are inconsistent with total inorganic nitrogen results (ammonia-N and nitrate+nitrite-N). In many cases TPN concentrations were less than total inorganic nitrogen results. If resources are identified to continue the monitoring, TPN should be dropped from the parameter list.

5. If additional resources cannot be identified for monitoring, then on-site monitoring wells should be properly decommissioned in accordance with Chapter 173-160 WAC, Minimum Standards for the Construction and Maintenance of Wells.

REFERENCES

Barrington, S. and P.J. Jutras. Soil Sealing by Manure in Various Soil Types. Paper No. 83-4571 for the 1983 Winter Meeting of the American Society of Agricultural Engineers, 1983, 28 pp.

------. Selecting Sites for Earthen Manure Reservoirs. Agricultural Waste Utilization and Management Proceedings of the Fifth International Symposium on Agricultural Wastes, December 16-17, 1985, pp. 386-392.

Bradbury, K.R. and E.R. Rothschild. A Computerized Technique for Estimating the Hydraulic Conductivity of Aquifers from Specific Capacity Data. Ground Water, Volume 23, No.2, 1985, pp. 240-246.

Dalen, L.D., W.P. Anderson, R.M. Rovang. Animal Manure Storage Pond Groundwater Quality Evaluation. Paper No. 83-4572 for the 1983 Winter Meeting of the American Society of Agricultural Engineers, 1983, 48 pp.

Davis, S.N. and R.J.M. DeWiest. Hydrogeology. John Wiley & Sons, 1966, 463 pp.

Davis, S., W. Fairbank, and H. Weisheit. Dairy Waste Ponds Effectively Self-Sealing. Transactions of the American Society of Agricultural Engineers, Volume 54, 1973 pp. 69-71.

Department of Health. State Board of Health Drinking Water Regulations, Revised September 1989, 65 pp.

Drever, J.I. The Geochemistry of Natural Waters. Prentice-Hall, Inc., 1982, 388 pp.

Easterbrook, D. J. Geology and Geomorphology of Western Whatcom County. Western Washington University, 1971, 68 pp.

Freeze, R.A. and J.A. Cherry. Groundwater. Prentice-Hall Inc., Englewood Cliffs, N.J., 1979, 604 pp.

------. "Groundwater Contamination from Waste-Management Facilities:Risk-based Engineering Design and Regulatory Policy", NWWA Distinguished Seminar Series on Ground Water Science, August 11-12, 1986, Portland, Oregon, 1986.

Gillies, J.A. Soil Conservation Service memorandum to Ed Brandsma dated February 14, 1990.

Meyer, J.L. Manure Waste Ponding and Field Application Rates, Part I, Study Findings and Recommendations. University of California Agricultural Extension Technical Report. 1973, 14 pp.

Miller, M.H., J.B. Robinson, R.W. Gillham. Self-Sealing of Earthen Liquid Manure Storage Ponds: A Case Study. Journal of Environmental Quality, Volume 14, No.4, 1985, pp. 533-543.

Phillips, P.A. and J.L.B. Culley. Groundwater Nutrient Concentrations Below Small-Scale Earthen Manure Storages. Agricultural Waste Utilization and Management Proceedings of the Fifth International Symposium on Agricultural Wastes, December 16-17, 1985, pp. 672-679.

Poulson, E. N. and R. D. Flannery. *Soil Survey of Whatcom County, Washington.* Series 1941, No 7., 1953. 153 pp.

Reese, L.E. and T.L. Loudon. Seepage From Earthen Manure Storages and Lagoons, A Literature Review. American Society of Agricultural Engineers 1983 Winter Meeting, Chicago, Illinois, 1983, 15 pp.

SCS. Waste Storage Pond Guidelines 425. April 1979, US Department of Agriculture, 1979, 2 pp.

------. Waste Storage Pond , PS-425, Washington State Supplement. U.S. Department of Agriculture, 1987, 2 pp.

Sewell, J.I. Dairy Lagoon Effects on Groundwater Quality. Paper No. 77-4050 for the American Society of Agricultural Engineers 1977 Annual Meeting, 1977, 16 pp.

Appendix A

Well Logs

Water Levels

RESOURCE PROTECTION WELL REPORT

073388

START CARD NO. 078208

PROJECT NAME: Edaleen Dairy Lagoon

WELL IDENTIFICATION NO. MW-1

DRILLING METHOD: Driven

DRILLER: Denis Erickson

FIRM: Dept of Ecology

SIGNATURE: Denis R. Erickson

CONSULTING FIRM:

REPRESENTATIVE:

COUNTY: Whatcom

LOCATION: NE ¼ SW ¼ Sec 5 Twn 40N R 3E

STREET ADDRESS OF WELL: 9405 Depot Road

WATER LEVEL ELEVATION: 115.6 (5/16/90)

GROUND SURFACE ELEVATION: 124.8

INSTALLED: 2/26/90 Deepened: 5/14/90

DEVELOPED: 5/16/90

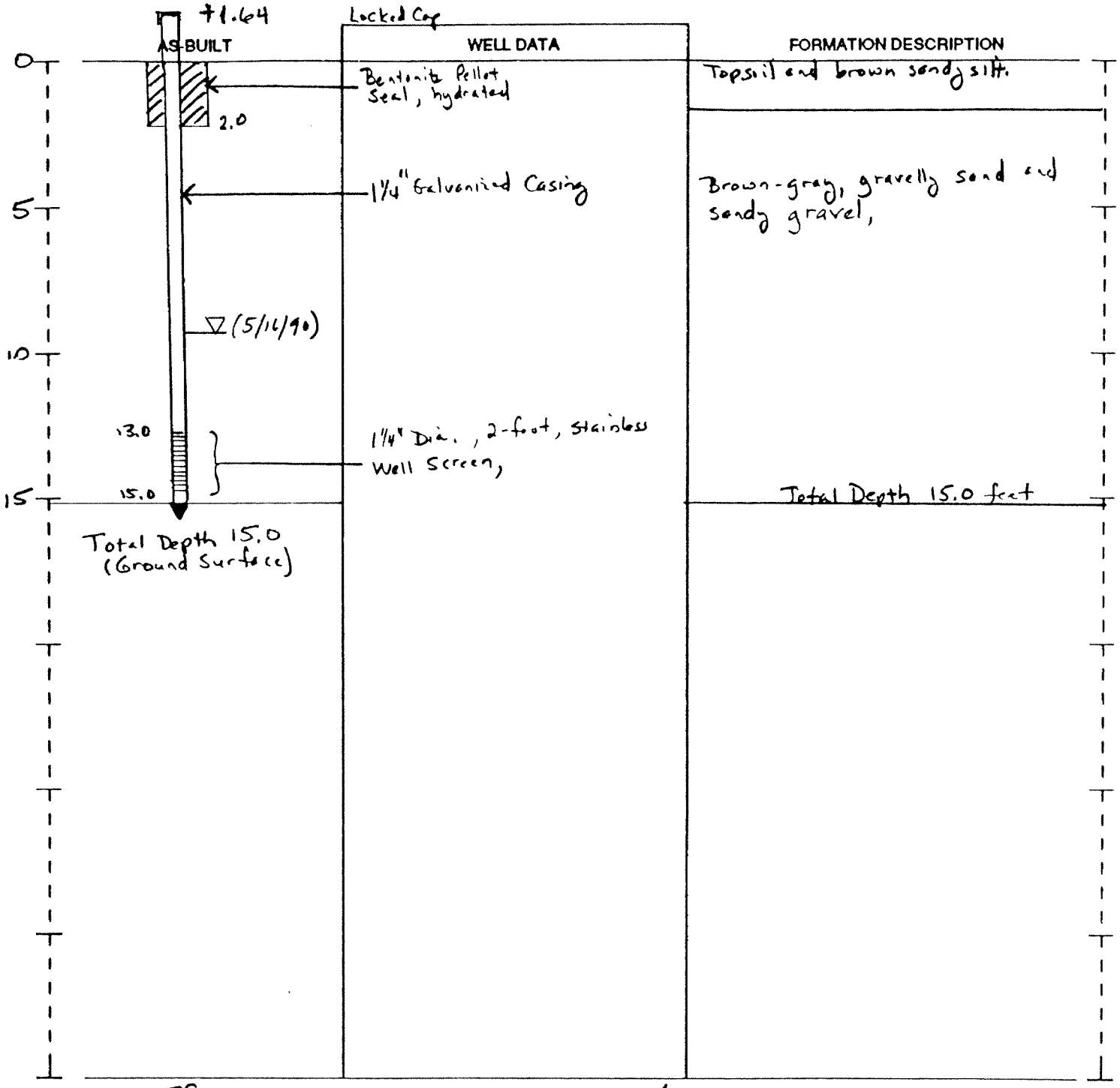

SCALE: 1" = 5 feet

PAGE 1 OF 1

ECY 050-12 (Rev. 11/89)

RESOURCE PROTECTION WELL REPORT

073388
START CARD NO. 078208

PROJECT NAME: Edaleen Dairy Lagoon
WELL IDENTIFICATION NO. MW-2
DRILLING METHOD: Driven
DRILLER: Denis Erickson
FIRM: Wash State Department of Ecology
SIGNATURE: Dennis R. Erickson
CONSULTING FIRM:
REPRESENTATIVE:

COUNTY: Whatcom
LOCATION: NE 1/4 SW 1/4 Sec 5 Twn 40N R 3E
STREET ADDRESS OF WELL: 9405 Depot Road

WATER LEVEL ELEVATION: 115.5
GROUND SURFACE ELEVATION: 124.3
INSTALLED: 2/26/90 Deepened: 5/14/90
DEVELOPED: 5/16/90

AS-BUILT	WELL DATA	FORMATION DESCRIPTION
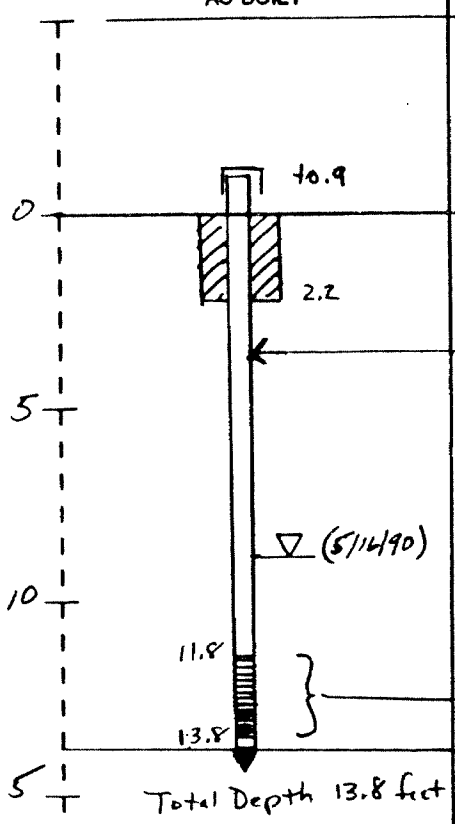	Locked Cap Bentonite Pellet Surface Seal, hydrated 1¼" Dia. Galvanized Casing 1¼" Dia. 2-foot, Stainless Steel Screen	GROUND SURFACE Topsoil and Brown sandy silt Brown to Gray, gravelly sand and sandy gravel Total Depth 13.8 feet

SCALE: 1" = 5 feet

PAGE 1 OF 1

ECY 050-12 (Rev. 11/89)

RESOURCE PROTECTION WELL REPORT

073388

START CARD NO. 078208

PROJECT NAME: Edaleen Dairy Lagoon

WELL IDENTIFICATION NO. MW-3

DRILLING METHOD: Driven

DRILLER: Denis Erickson

FIRM: Wash State Department of Ecology

SIGNATURE: Denis R. Erickson

CONSULTING FIRM:

REPRESENTATIVE:

COUNTY: Whatcom

LOCATION: NE ¼ SW ¼ Sec 5 Twn 40N R 3E

STREET ADDRESS OF WELL: 9405 Depot Road

WATER LEVEL ELEVATION: 115.2

GROUND SURFACE ELEVATION: 125.9

INSTALLED: 2/26/90 Deepened: 5/15/90

DEVELOPED: 5/16/90

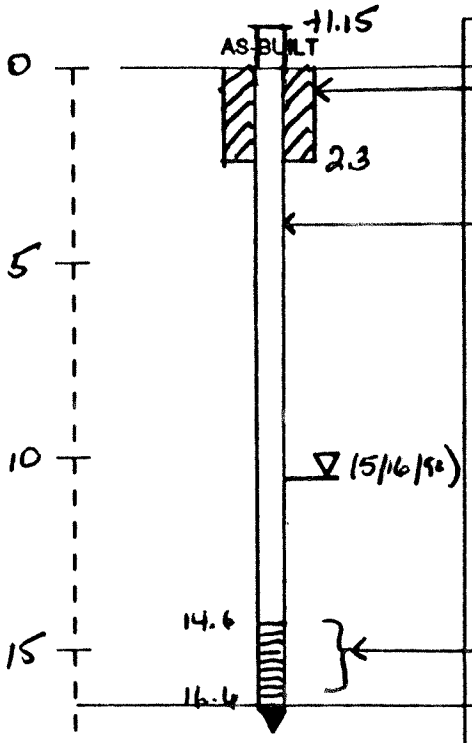

WELL DATA	FORMATION DESCRIPTION
Bentonite Pellet Surface Seal, hydrated	Topsoil and Brown sandy SILT
1¼" Dia. Galvanized Steel Casing	Brown to gray, gravelly SAND and sandy GRAVEL
1¼" Dia Stainless Steel Screen, 2-foot	Total Depth 16.6

SCALE: 1" = 5 feet

PAGE 1 OF 1

ECY 050-12 (Rev. 11/89)

RESOURCE PROTECTION WELL REPORT

START CARD NO. 073388 078208

PROJECT NAME: Edaleen Dairy Lagoon
WELL IDENTIFICATION NO. MW-4
DRILLING METHOD: Driven
DRILLER: Denis Erickson
FIRM: Dept. of Ecology
SIGNATURE: Denis R. Erickson
CONSULTING FIRM:
REPRESENTATIVE:

COUNTY: Whatcom
LOCATION: NE ¼ SW ¼ Sec 5 Twn 40N R 3E
STREET ADDRESS OF WELL: 9405 Depot Road

WATER LEVEL ELEVATION: 114.4
GROUND SURFACE ELEVATION: 123.2
INSTALLED: 2/27/90 Deepened: 5/15/90
DEVELOPED: 5/16/90

AS-BUILT	WELL DATA	FORMATION DESCRIPTION
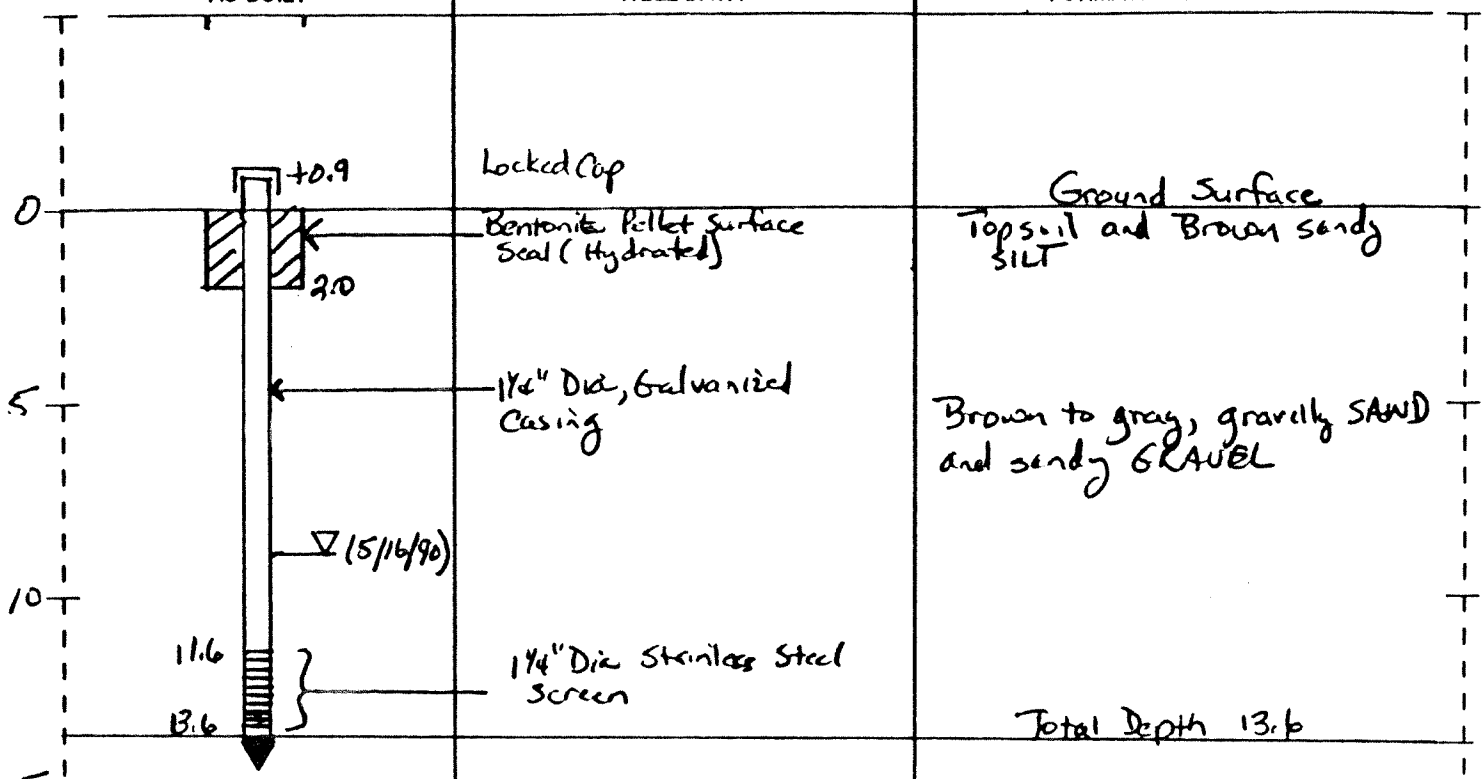		

Locked Cap

Bentonite Pellet Surface Seal (Hydrated)

1¼" Dia, Galvanized Casing

1¼" Dia Stainless Steel Screen

Ground Surface

Topsoil and Brown sandy SILT

Brown to gray, gravelly SAND and sandy GRAVEL

Total Depth 13.6

SCALE: 1" = 5ft

PAGE 1 OF 1

ECY 050-12 (Rev. 11/89)

RESOURCE PROTECTION WELL REPORT

073788

START CARD NO. 078208

PROJECT NAME: Edaleen Dairy Lagoon
WELL IDENTIFICATION NO. MW-5
DRILLING METHOD: Driven
DRILLER: Denis Erickson
FIRM: Dept. of Ecology
SIGNATURE: Denis R Erickson
CONSULTING FIRM:
REPRESENTATIVE:

COUNTY: Whatcom
LOCATION: NE 1/4 SW 1/4 Sec 5 Twn 40N R 3E
STREET ADDRESS OF WELL: 9405 Depot Road

WATER LEVEL ELEVATION: 117.3
GROUND SURFACE ELEVATION: 125.0
INSTALLED: 2/27/90
DEVELOPED: 2/27/90

AS-BUILT	WELL DATA	FORMATION DESCRIPTION
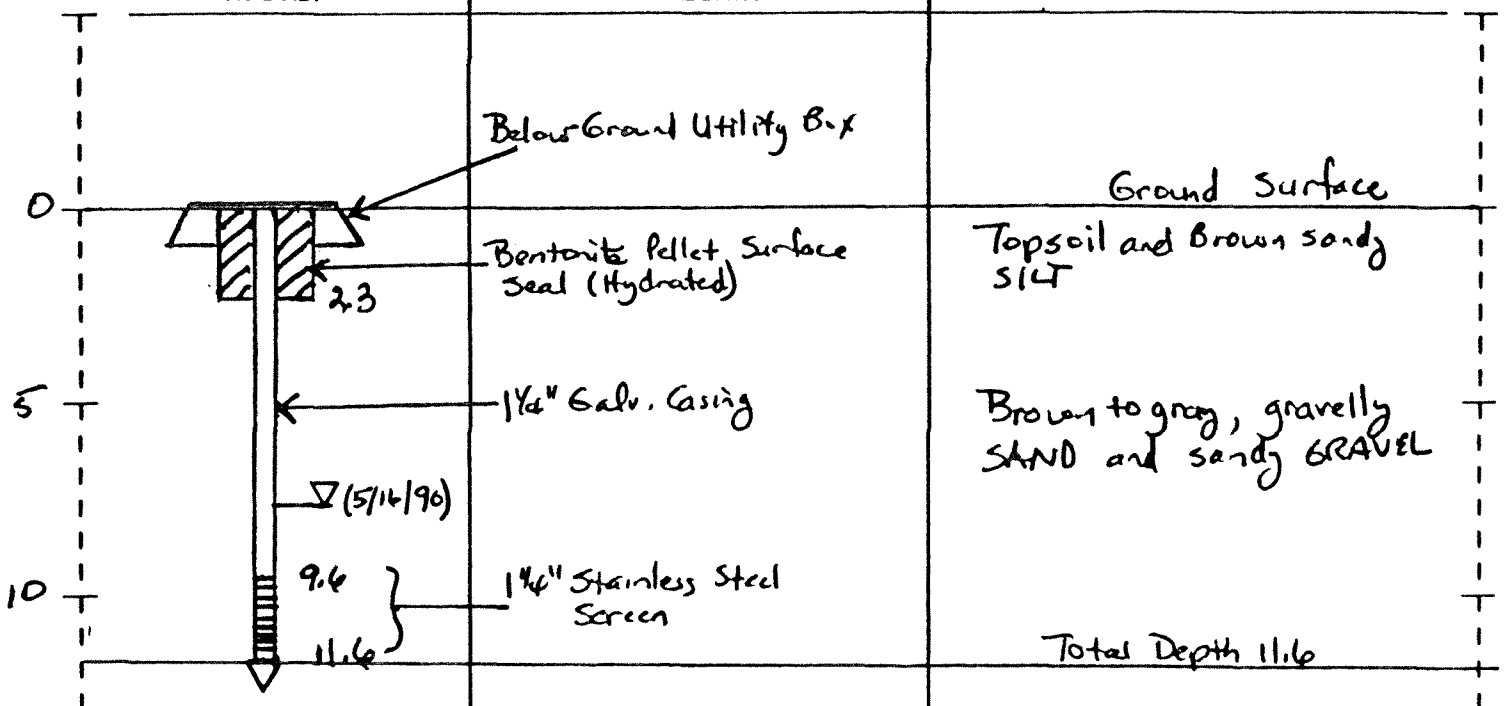	Below Ground Utility Box	Ground Surface
	Bentonite Pellet Surface Seal (Hydrated)	Topsoil and Brown sandy SILT
	1¼" Galv. Casing	Brown to gray, gravelly SAND and sandy GRAVEL
	1¼" Stainless Steel Screen	Total Depth 11.6

SCALE: 1" = 5 feet

PAGE 1 OF 1

ECY 050-12 (Rev. 11/89)

RESOURCE PROTECTION WELL REPORT

073388

START CARD NO 078208

PROJECT NAME: Edaleen Dairy Lagoon
WELL IDENTIFICATION NO. MW-6
DRILLING METHOD: Driven
DRILLER: Denis Erickson
FIRM: Dept of Ecology
SIGNATURE: Denis R Erickson
CONSULTING FIRM:
REPRESENTATIVE:

COUNTY: Whatcom
LOCATION NE 1/4 SW 1/4 Sec 5 Twn 40N R 3E
STREET ADDRESS OF WELL: 9405 Depot Road

WATER LEVEL ELEVATION: ~ 115.5 5/14/90
GROUND SURFACE ELEVATION: 124.5
INSTALLED: 2/27/90 Deepened: 5/15/90
DEVELOPED: 2/27/90

AS-BUILT	WELL DATA	FORMATION DESCRIPTION
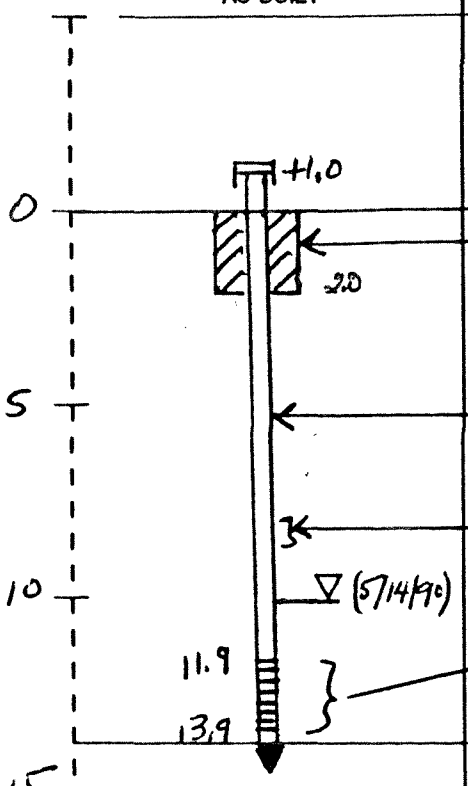	Locked Cap	Ground Surface
	Bentonite Pellet Surface Seal (Hydrated)	Topsoil and Brown sandy SILT
	1¼" Dia Galvanized casing	Brown to gray, gravelly SAND and sandy GRAVEL
	Obstruction @ 9.2 feet after deepening	
	1¼" Dia. Stainless Steel Screen	
		Total Depth 13.9

SCALE: 1" = 5 feet

PAGE 1 OF 1

ECY 050-12 (Rev. 11/89)

RESOURCE PROTECTION WELL REPORT

078212

START CARD NO. 078204

PROJECT NAME: Edaleen Dairy Lagoon
WELL IDENTIFICATION NO. MW-6A
DRILLING METHOD: Driving
DRILLER: Denis Erickson
FIRM: Dept of Ecology
SIGNATURE: Denis R. Erickson
CONSULTING FIRM: MNE
REPRESENTATIVE: MNE

COUNTY: Whatcom
LOCATION: NE ¼ SW ¼ Sec 5 Twn 40N R 3E
STREET ADDRESS OF WELL: 9405 Depot Rd Lynden, WA
WATER LEVEL ELEVATION: 119
GROUND SURFACE ELEVATION: 124
INSTALLED: 11/28/90 (Decomissioned)
DEVELOPED: 11/28/90

AS-BUILT	WELL DATA	FORMATION DESCRIPTION
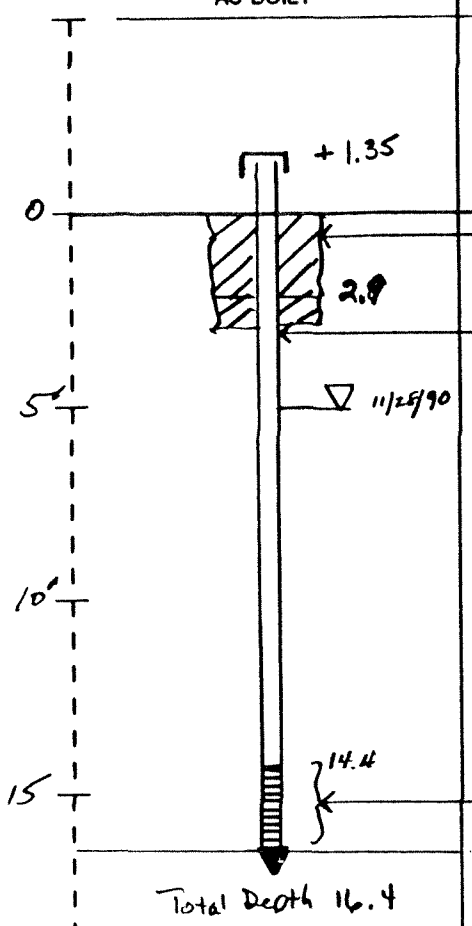	Locked Cap	Ground Surface
	Bentonite Pellet Seal (hydrated)	Topsoil and brown sandy SILT
	1¼" Galvanized Steel Casing	Brown to gray, gravelly SAND and sandy GRAVEL
	1¼" Dia., Stainless Steel Screen, 60 g²	Total Depth 16.4

SCALE: 1" = 5 feet

PAGE 1 OF 1

ECY 050-12 (Rev. 11/89)

RESOURCE PROTECTION WELL REPORT

START CARD NO. 078212

PROJECT NAME: Edaleen Dairy Lagoon
WELL IDENTIFICATION NO. MW-7A
DRILLING METHOD: Driving
DRILLER: Denis Erickson
FIRM: Dept of Ecology
SIGNATURE: Denis R. Erickson
CONSULTING FIRM: NONE
REPRESENTATIVE: NONE

COUNTY: Whatcom
LOCATION: NE ¼ SW ¼ Sec 5 Twn 40N R 3E
STREET ADDRESS OF WELL: 9405 Depot Rd
Lynden, WA
WATER LEVEL ELEVATION: 119
GROUND SURFACE ELEVATION: 124
INSTALLED: 11/28/90
DEVELOPED: 12/18/90

AS-BUILT	WELL DATA	FORMATION DESCRIPTION
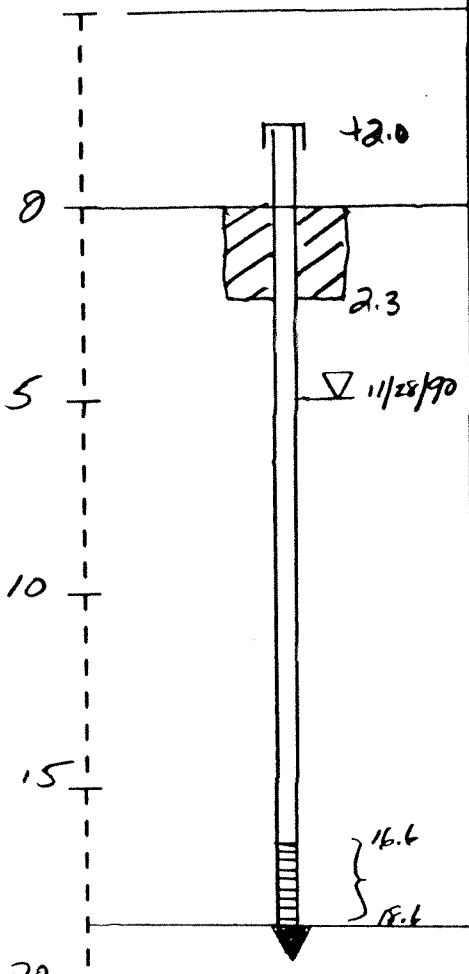	Locking Cap	Ground Surface
	Bentonite Pellet Seal (Hydrated)	Topsoil and brown sandy SILT
	1¼" Dia. Galvanized Steel Casing	Brown to gray, gravelly SAND and sandy GRAVEL
	1¼" Stainless Steel Screen, 60 ga	Total Depth = 18.6 feet

SCALE: 1" = 5 feet

PAGE 1 OF 1

ECY 050-12 (Rev. 11/89)

Edaleen Dairy Lagoon Water Levels
(Note: Water Level Elevations Adjusted for MP Changes)

Site ID	Date	TOC	X	Y	HzO Dpth	Water Elev
MW1	02/28/90	126.66	1634808	743216	7.68	118.98
MW1	03/07/90	126.66	1634808	743216	8.47	118.19
MW1	04/10/90	126.66	1634808	743216	9.94	116.72
MW1	05/16/90	126.42	1634808	743216	10.84	115.58
MW1	06/19/90	126.42	1634808	743216	9.89	116.53
MW1	07/31/90	126.42	1634808	743216	12.08	114.34
MW1	08/27/90	126.42	1634808	743216	14.24	112.18
MW1	09/25/90	126.42	1634808	743216	14.27	112.15
MW1	10/22/90	126.42	1634808	743216	13.77	112.65
MW1	11/26/90	126.42	1634808	743216	6.35	120.07
MW1	12/18/90	126.42	1634808	743216	6.03	120.39
MW1	01/22/91	126.42	1634808	743216	8.31	118.11
MW1	02/26/91	126.42	1634808	743216	7.88	118.54
MW2	02/28/90	126.26	1634942	743210	7.34	118.92
MW2	03/07/90	126.26	1634942	743210	8.09	118.17
MW2	04/10/90	126.26	1634942	743210	9.65	116.61
MW2	05/16/90	125.17	1634942	743210	9.71	115.46
MW2	06/19/90	125.17	1634942	743210	8.8	116.37
MW2	07/31/90	125.17	1634942	743210	11.08	114.09
MW2	08/27/90	125.17	1634942	743210	12.89	112.28
MW2	09/25/90	125.17	1634942	743210	13.15	112.02
MW2	10/22/90	125.17	1634942	743210	12.58	112.59
MW2	11/26/90	125.17	1634942	743210	5.29	119.88
MW2	12/18/90	125.17	1634942	743210	4.99	120.18
MW2	01/22/91	125.17	1634942	743210	7.22	117.95
MW2	02/26/91	125.17	1634942	743210	6.78	118.39
MW3	02/28/90	126.03	1635150	743210	7.23	118.8
MW3	03/07/90	126.03	1635150	743210	7.93	118.1
MW3	04/10/90	126.03	1635150	743210	9.52	116.51
MW3	05/16/90	126.95	1635150	743210	11.8	115.15
MW3	06/19/90	126.95	1635150	743210	10.87	116.08
MW3	07/31/90	126.95	1635150	743210	13	113.95
MW3	08/27/90	126.95	1635150	743210	14.4	112.55
MW3	09/25/90	126.95	1635150	743210	15.03	111.92
MW3	10/22/90	126.95	1635150	743210	14.31	112.64
MW3	11/26/90	126.95	1635150	743210	7.31	119.64
MW3	12/18/90	126.95	1635150	743210	6.97	119.98
MW3	01/22/91	126.95	1635150	743210	9.2	117.75
MW3	02/26/91	126.95	1635150	743210	8.72	118.23
MW4	02/28/90	125.00	1635478	743072	6.13	118.87
MW4	03/07/90	125.00	1635478	743072	7.54	117.46
MW4	04/10/90	125.00	1635478	743072	8.81	116.19
MW4	05/16/90	124.12	1635478	743072	9.75	114.37
MW4	06/19/90	124.12	1635478	743072	8.95	115.17
MW4	07/31/90	124.12	1635478	743072	11.05	113.07
MW4	08/27/90	124.12	1635478	743072	12.62	111.5
MW4	09/25/90	124.12	1635478	743072	12.76	111.36
MW4	10/22/90	124.12	1635478	743072	12.11	112.01
MW4	11/26/90	124.12	1635478	743072	5.59	118.53
MW4	12/18/90	124.12	1635478	743072	5.23	118.89
MW4	01/22/91	124.12	1635478	743072	7.3	116.82

MW4	02/26/91	124.12	1635478	743072	6.73	117.39
MW5	02/28/90	124.96	1635124	743730	4.19	120.77
MW5	03/07/90	124.96	1635124	743730	5.2	119.76
MW5	04/10/90	124.96	1635124	743730	6.78	118.18
MW5	05/16/90	124.96	1635124	743730	7.7	117.26
MW5	06/19/90	124.96	1635124	743730	6.9	118.06
MW5	07/31/90	124.84	1635124	743730	6.26	118.58
MW5	08/27/90	124.84	1635124	743730	11.07	113.77
MW5	10/22/90	124.84	1635124	743730	10.51	114.33
MW5	11/26/90	124.84	1635124	743730	3.2	121.64
MW5	12/18/90	124.84	1635124	743730	2.96	121.88
MW5	01/22/91	124.84	1635124	743730	5.19	119.65
MW5	02/26/91	124.84	1635124	743730	4.72	120.12
MW6	02/28/90	125.93	1635436	743192	7.37	118.56
MW6	03/07/90	125.93	1635436	743192	7.6	118.33
MW6	04/10/90	125.93	1635436	743192	8.93	117
MW6A	07/31/90	126.33	1635436	743192	12.91	113.42
MW6A	10/22/90	126.33	1635436	743192	12.93	113.4
MW6A	11/26/90	126.33	1635436	743192	7.51	118.82
MW6A	12/18/90	125.64	1635436	743192	6.5	119.14
MW6A	01/22/91	125.64	1635436	743192	8.57	117.07
MW6A	02/26/91	125.64	1635436	743192	8.02	117.62
MW7A	12/18/90	125.97	1635154	743080	6.2	119.77
MW7A	01/22/91	125.97	1635154	743080	8.64	117.33
MW7A	02/26/91	125.97	1635154	743080	8.12	117.85
M.Lagoon	02/28/90					Not Used
M.Lagoon	03/07/90					Not Used
M.Lagoon	04/10/90					Not Used
M.Lagoon	05/16/90					123
M.Lagoon	06/19/90					123
M.Lagoon	07/31/90					123
M.Lagoon	08/27/90					120
M.Lagoon	09/25/90					120
M.Lagoon	10/22/90					126
M.Lagoon	11/26/90					127
M.Lagoon	12/18/90					129
M.Lagoon	01/22/91					131
M.Lagoon	02/26/91					131