A Department of Ecology Report

Winter Soil Pore-Water Nitrate at the Deer Park Land Application Site 1995-96

Abstract

Nitrogen in soil pore-water was sampled at the Deer Park land application site in winter 1995-96 to follow up on a 1993 study. Composite winter samples were obtained from capillary wick (wick) soil pore-water samplers that accumulated water from October 1995 until April 1996. Ceramic cup suction pore-water samplers that were still intact were also sampled in April 1996.

Although effluent is not applied to the fields between November and March, wintertime concentrations of nitrate+nitrite-N were similar to summer 1993 concentrations based on results from the wick samplers.

Twenty-three percent of an estimated total annual load of nitrate+nitrite-N percolating below the root zone occurred in the winter. The resulting increase in underlying ground water nitrate+nitrite-N concentration is estimated as 5 mg/L after one year. Because the crop overlying the samplers was not managed or harvested as were crops in the field, these estimates may not be as representative of conditions in the undisturbed field as estimates would be if the field and study area had been managed identically.

Monitoring networks that use wick soil pore-water samplers may be useful at other small municipal land application facilities in eastern Washington to provide an early warning of nitrogen impacts on ground water. Such networks would be especially useful at sites where complicated geology makes ground water monitoring difficult. Soil pore-water information could be useful for adjusting land application operations to prevent or minimize detrimental effects on ground water.

by Barbara Carey
April 1997
Waterbody No. WA-55-1012GW
Ecology Report #97-308

Introduction

The City of Deer Park land application site (Figure 1) was chosen by the Department of Ecology, Eastern Regional Office, for a soil pore-water investigation, because it represents several small municipal operations in eastern Washington. Treated effluent from the city's wastewater treatment facility is applied from April through October at the site. The site is a 160-acre field located on city airport property. Alfalfa is cultivated at the field.

The underlying basalt geology makes ground water flow paths difficult and costly to characterize. Nitrate is water-soluble and a health concern. The state primary drinking water standard for protection of human health is 10 mg/L. High total dissolved solids (TDS) is also a concern. High TDS concentrations can make ground water unusable for irrigation.

The purposes of the original study were to:

1. Evaluate the effectiveness of effluent nitrogen and TDS treatment by the land application system
2. Evaluate the effectiveness of soil pore-water monitoring as an early warning system for potential ground water impacts of land application
3. Test three types of soil pore-water samplers

Two locations were selected for the original study (Figure 2). A similar array of multiple soil pore-water samplers was installed at each site. Details of soils, hydrogeology, and the land application system are provided in Carey (1995). The sampler areas were roped off during the study to prevent damage by farm equipment. The Field 4 study areas were not harvested during the study. The study area at Field 6 was mowed with a small tractor prior to winter sampling in October 1995.

Samples were collected six times during the original study between May and October 1993. Nitrate was the primary nitrogen compound found in the soil pore-water samplers.

Results of the 1993 study were used to estimate the loading of nitrogen to the subsurface during the summer growing season and to predict effects on ground water nitrate concentrations. However, these findings did not include any winter sampling. The current study assesses the annual impact on ground water of the land application operation, including winter percolation.

The second study phase consisted of nitrogen sampling in soil pore-water between November 1995 and April 1996 at the City of Deer Park municipal land application site.

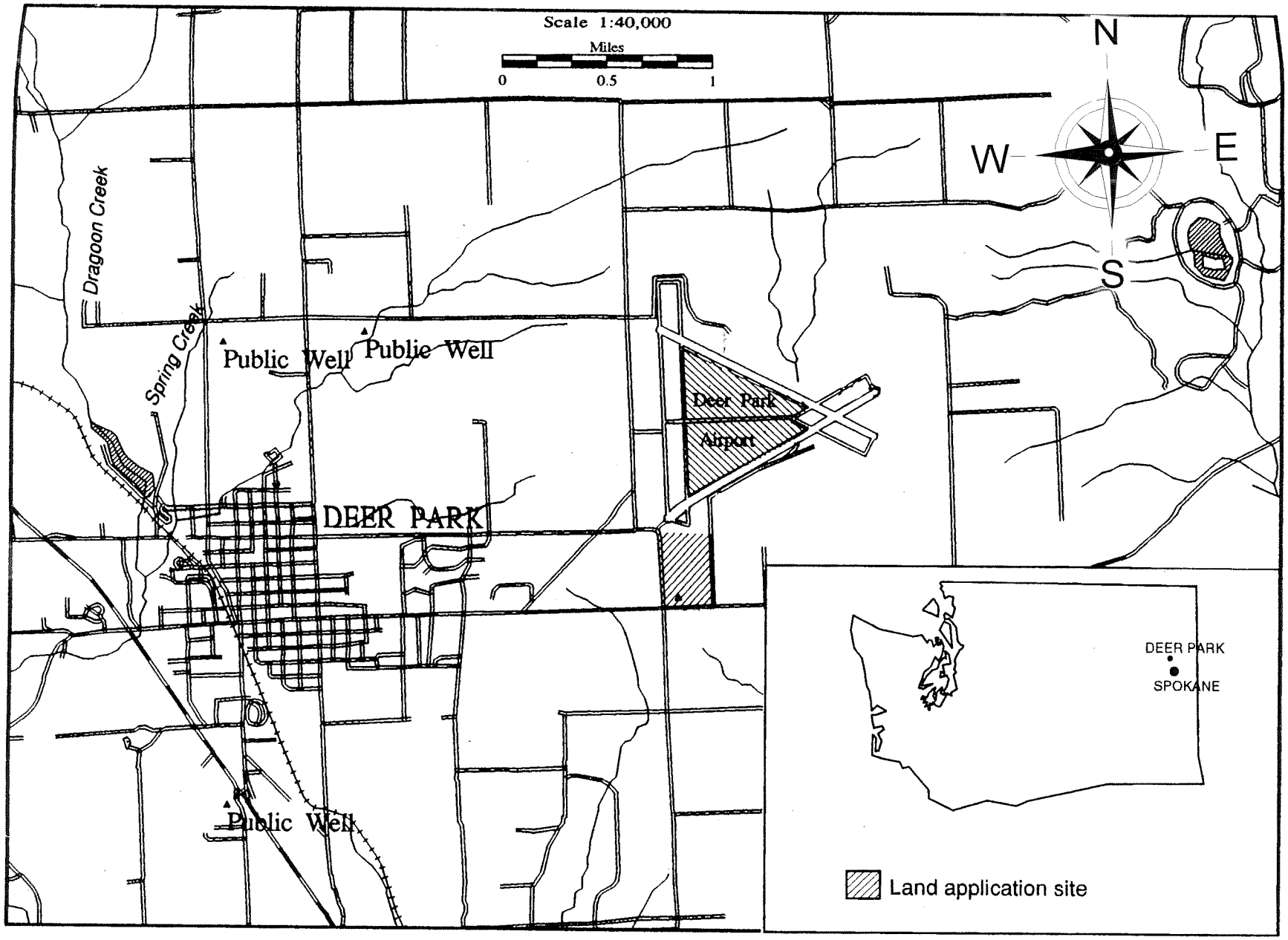

Figure 1. Map of the City of Deer Park and vicinity.

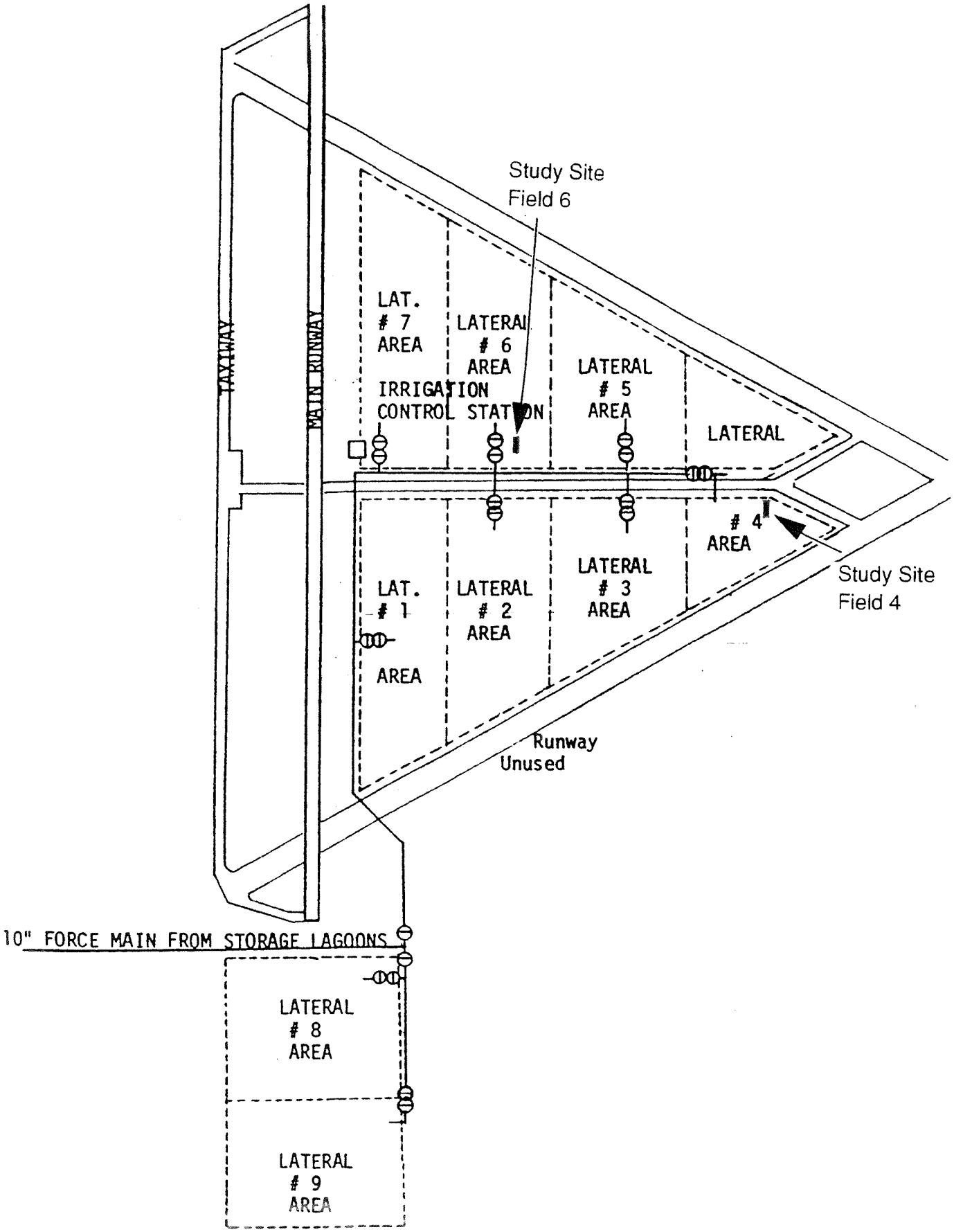

Figure 2. Land application area showing the study site locations and irrigation system (from Esvelt Engineering, Spokane, Washington).

This sampling assessed wintertime percolation of nitrogen and the longevity of two types of soil pore-water samplers left unattended for two years. Although effluent is not applied in the winter months, percolating water from precipitation and snow melt can transport nitrogen stored in the soil or released by chemical or biological reactions.

Two of the three original sampler types were included in follow-up sampling: capillary wicks (wick) and ceramic cup suction soil pore-water samplers as shown in Figures 3 and 4. Twelve wick samplers had been installed, six at each study site: four at three-feet depth and eight at four-feet. Sampler locations are shown in Figures 5 and 6. Construction is detailed in Carey (1995).

The wick samplers consist of a 1/2-inch diameter hanging woven fiberglass wick, which, when saturated, exerts a slight tension on moisture in the soil with which it is in contact (Figure 3). The top five inches of the wick are unwoven and glued to a plexiglass plate. The remaining 22 inches of wick are enclosed in flexible conduit tubing. The tubing/wick assembly hangs down and connects to a 5-liter polyethylene carboy below. Moisture moves down the wick and drips into the carboy. Samples are removed using a vacuum at the surface attached to tubing that extends to the bottom of the carboy.

The suction soil pore-water samplers consisted of two-inch diameter PVC tubes with a ceramic cup at the bottom (Figure 4). Two holes in the rubber stoppers at the top of the samplers allowed 1/4-inch polyethylene tubing to be inserted. One tube extended to the bottom of the sampler to deliver the sample to the surface. The other tube extended just below the stopper. This tube was used to apply either vacuum to collect the sample or pressure to discharge the sample. Both tubes also extended to the ground surface.

Results of the summer and winter studies are combined to estimate the annual input of nitrogen to the subsurface and the projected increase in underlying ground water nitrate concentrations.

Methods

Field and analytical methods

Wick soil pore-water samplers were emptied on October 18, 1995 to prepare for sampling. A vacuum/pressure hand pump attached to a 1-liter, side-arm flask was used to empty the samplers which had been unattended for two years. The flask was connected to the sampler's exit tubing with clean polyethylene tubing while vacuum was applied. Ten of the twelve wick samplers contained water. The volumes emptied are shown in Table 1.

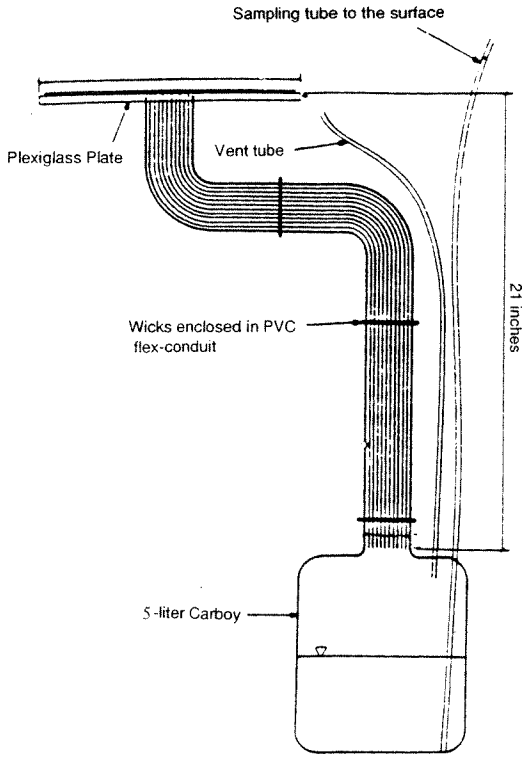

Figure 3. Diagram of a capillary wick lysimeter.

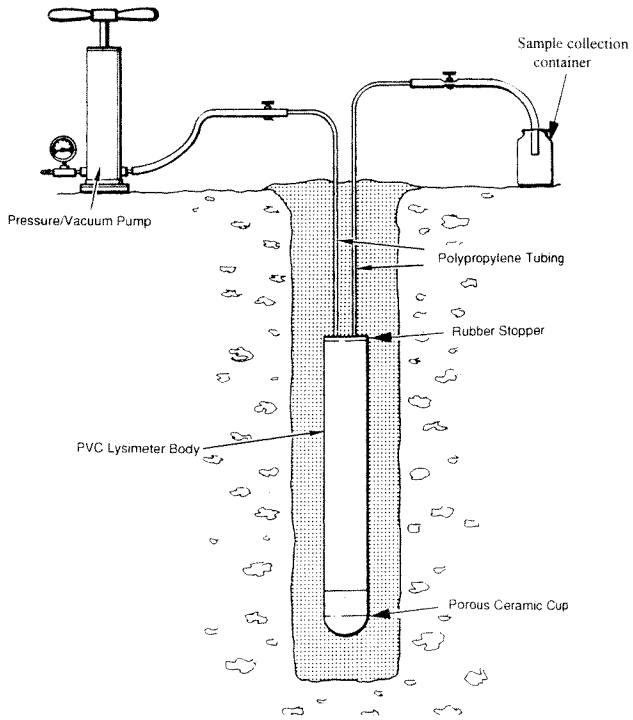

Figure 4. Diagram of a suction lysimeter and sampling apparatus.

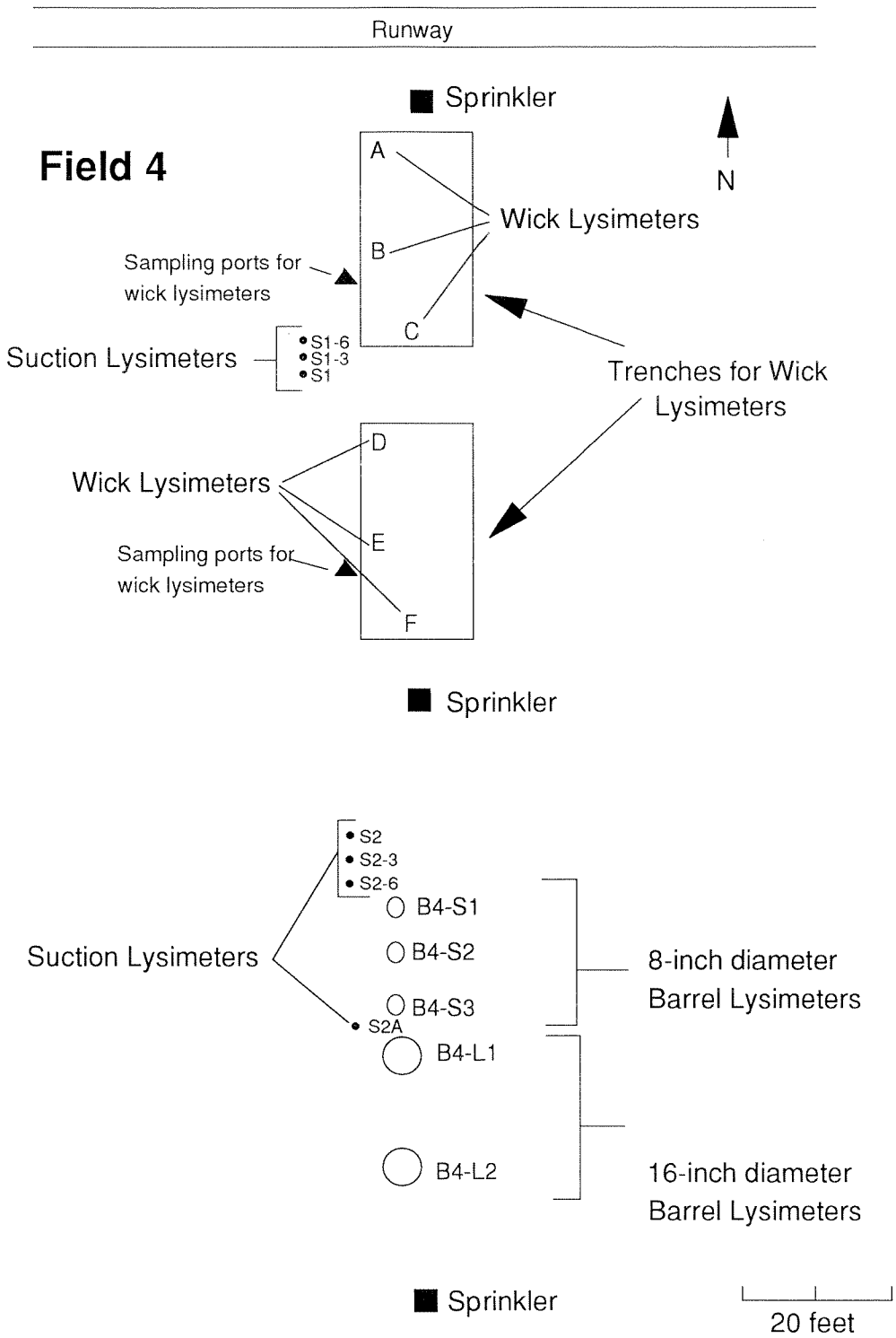

Figure 5. Sampling equipment locations at Field 4.

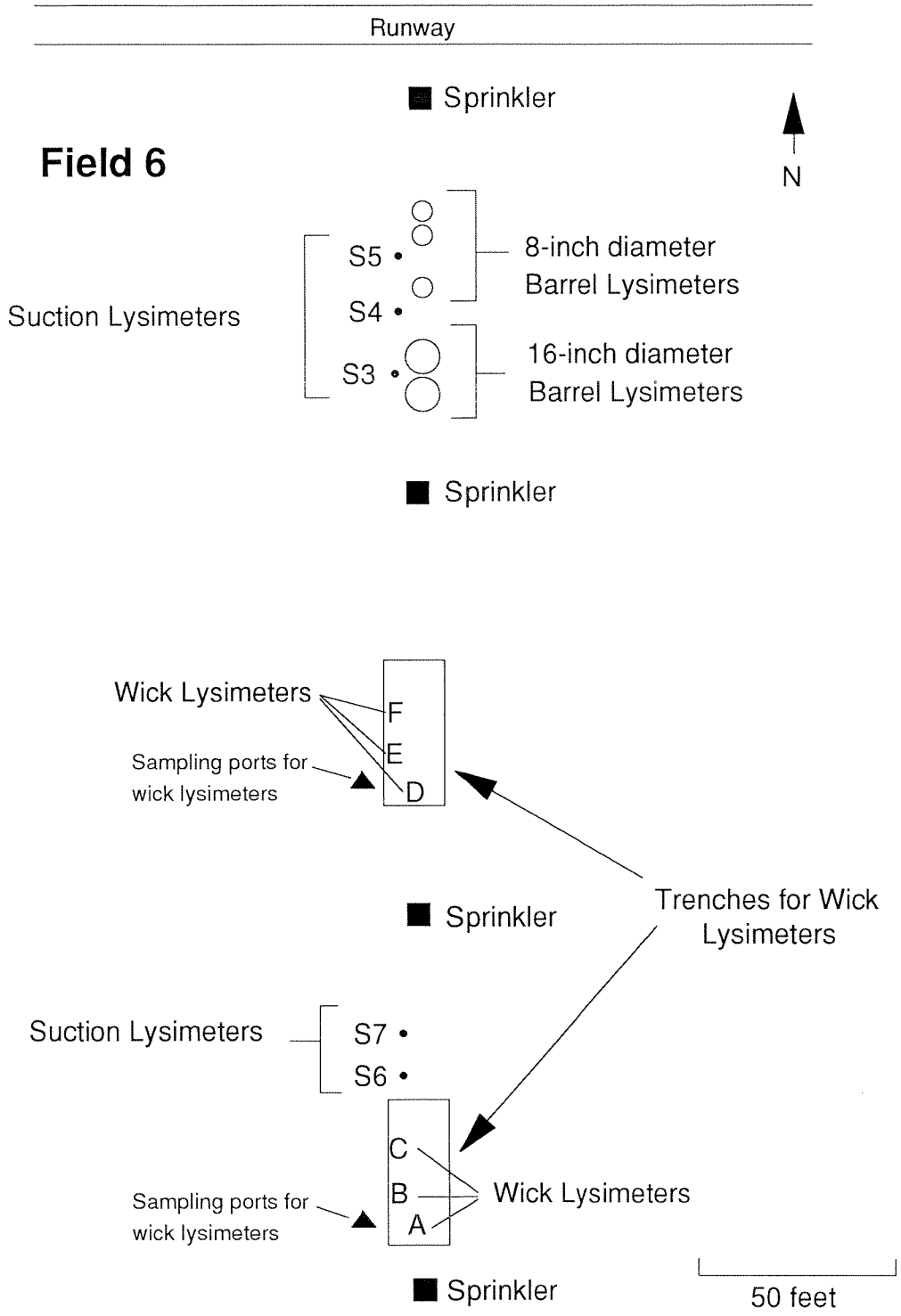

Figure 6. Sampling equipment locations for Field 6.

Table 1. Volume of water in each sampler on October 18, 1995 and April 25-26, 1996 and sampler status.

Sampler I.D.	Volume on 10/18/1995 (L)	Volume on 4/25-26/1996 (L)	Sampler status
Wick samplers			
W4-A	0.4	0	not working well
W4-B	0	0	not working
W4-C	3.2	0	OK
W4-D	8.2	0	OK
W4-E	3.4	0.85	OK
W4-F	7.5	6.3	OK
W6-A	8.5	8.7	OK
W6-B	0	1.0	OK
W6-C	8.0	8.8	OK
W6-D	6.7	6.4	OK
W6-E	8.6	2.5	OK
W6-F	8.2	0	OK
Suction samplers			
S1		0.15	OK
S1-3		NA	Removed
S1-6		0	Repairable
S2		NA	Leak
S2-3		NA	Removed
S2-6		0	OK
S2A		NA	Irrepairable
S3		0.15	OK
S4		NA	Irrepairable
S5		0.03	OK
S6		NA	Irrepairable
S7		NA	Irrepairable

The wick samplers collected water from the soil between October 18, 1995 and April 26, 1996, just prior to the start of the 1996 effluent application season. The same methods used to empty samplers were used to collect samples.

Water from one-liter sample collection flasks was poured into appropriate sample bottles. Samples for nitrogen species were preserved with sulfuric acid. Water was extracted from

each wick sampler until empty. The volume of water in each sampler on April 25-26, 1996 is shown in Table 1.

Before sampling, collection flasks were cleaned with 10% sulfuric acid. However, because there were only six flasks, a used flask, rinsed three times with deionized water between samplers, was used for the last four samplers.

Three suction soil pore-water samplers operated in April 1996 as shown in Figures 3 and 4. A suction of 60 centibars was applied to the samplers using a vacuum/pressure hand pump. Samples were collected from the suction samplers the following day and analyzed for the same constituents as the wick soil pore-water samples.

Samples were placed in coolers on ice and transported to the Ecology Manchester Laboratory. Samples were analyzed for ammonia-N, nitrate+nitrite-N, and total persulfate N (TPN). Analytical methods and detection limits for each parameter are shown in Appendix A.

Data analysis methods

Nitrogen loading to the subsurface was calculated by multiplying the volume of precipitation at the site between November 1995 and April 1996 by the mean nitrate+nitrite-N concentration in the wick soil pore-water samplers. Precipitation at Spokane, Washington, about 20 miles south, was used to estimate the volume of water percolating through this 160-acre site (Western Regional Climate Center, 1996). I assumed that consumptive use and evapotranspiration were negligible during this period, because snow covers the ground during much of the winter.

All calculations are based on results from the wick samplers, because they represent soil pore-water accumulated over the entire winter season. Results from the suction samplers represent soil pore-water for only one day.

I assumed that the concentration of total nitrogen in the wick samplers is conservative, because the exit tubing was stoppered. Therefore nitrogen gas could not escape. I also assumed that the conversion of ammonia-N and organic-N to nitrate- and nitrite-N in the wick samplers is similar to what would occur in the soil.

The increase in ground water nitrate resulting from soil pore-water loading was estimated using the method described in Carey (1995), p. 14.

Quality assurance methods

A rinsate blank was used for quality control. Deionized distilled water was pumped through clean sample tubing into a collection flask that had been rinsed three times with deionized distilled water after collecting a sample from a wick sampler. This represented the worst case contamination situation. The concentrations of TPN and nitrate+nitrite-N in the blank, although measurable, were not enough to have a significant effect on the results. The sampler concentrations were about two orders of magnitude greater than the rinsate blank (Appendix B).

Laboratory quality assurance consisted of a written review of the data include holding time and results of instrument calibration, procedural blanks, spiked samples, and control samples. All samples were reviewed and analyzed within standard holding times. Results were within USEPA Contract Laboratory Program quality assurance requirements.

Results

Results from the 1995-96 soil pore-water sampler sampling are described in this section. The volume of each sample and the concentration of nitrogen species are discussed below.

Sample volume

The volume of water collected from each sampler is shown in Table 1. Seven of the twelve wick samplers contained soil pore-water in April 1996. Four of the wick samplers that contained water when purged in October 1995 were still empty in April 1996. One wick sampler that had been empty in October 1995 contained one liter of sample in April 1996.

Two of the twelve suction samplers produced 150 ml, which was sufficient for analysis. Another suction sampler contained 30 ml, which was not adequate for sampling. Most of the other nine suction samplers, which had not been well protected, were damaged beyond repair.

Nitrogen

Ammonia-N was not detected in any of the samples above the detection limit of 0.01 mg/L (Table 2). However, concentrations of nitrate+nitrite-N ranged from 1.31 to 10.0 mg/L. Total persulfate N ranged from 1.58 to 10.5 mg/L.

The mean winter nitrate+nitrite-N concentration was 5.7 mg/L (S.D.=3.7, n=7). Nitrate+nitrite-N averaged 89 percent of the total N concentration (S.D.= 5.8 percent, n=7).

Table 2. Deer Park non-growing season nitrogen values in mg/L from wick and suction lysimeters sampled on April 25-26, 1996.

Sampler ID	Ammonia-N		Nitrate+ nitrite-N	Total Persulfate	% of total N= NO3+NO2-N
Wick samplers					
Field 4					
W4-E	0.010	U	8.16	9.06	0.90
W4-F	0.010	U	9.68	10.1	0.96
Field 6					
W6-A	0.010	U	1.31	1.58	0.83
W6-B	0.010	U	10.0	10.5	0.95
W6-C	0.010	U	2.67	3.02	0.88
W6-D	0.010	U	1.91	2.38	0.80
W6-E	0.010	U	5.77	6.46	0.89
Suction samplers					
Field 4					
S1			2.78	4.55	
Field 6					
S3			0.019	0.6	
S5*			25.0	26.0	

*Insufficient sample volume.

U: Analyte was below this value.

Conclusions

The results were analyzed for differences between winter 1995-96 and summer 1993 nitrate+nitrite-N concentrations as well as mass loading of nitrogen to the subsurface. The potential impact of the total annual load to ground water was also evaluated. I assumed that the application of effluent in 1995, immediately preceding the winter sampling, was similar to that in 1993

Another assumption of both the summer and winter studies is that soil pore-water in the sampling areas is representative of soil pore-water in the rest of the field. Although the sampling area received effluent at the same rate as the surrounding field, the alfalfa crop in the field was harvested two to three times per year. The vegetation in the sampling areas was only cut once at Site 6 in October 1995. Because the alfalfa plants in the study sites were not harvested, they were not as thick and healthy as in the field. These differences in crop and harvesting may have affected the nitrogen uptake and flow of water in the vadose zone.

Winter versus summer nitrate+nitrite-N concentrations

The average winter nitrate+nitrite-N concentration, 5.7 mg/L, was lower than the summer 1993 mean of 11.8 mg/L (Table 3, S.D.= 4.9, n=6).

Table 3. Mean nitrate+nitrite-N concentrations for all capillary wick samplers during the 1993 effluent application season.

Date	Mean NO3+NO2-N (mg/L)
5/6/93	9.0
6/11/93	9.0
7/22/93	19.0
8/6/93	16.3
9/15/93	11.6
10/1/93	6.1

Nitrate-N comprised 89% of the total N found in soil pore-water during the winter, higher than the 75% found during the summer (Carey, 1995). This may be due to nitrogen mineralization in the sample container during the long winter sampling period.

Mass loading of nitrate+nitrite-N to the subsurface

The winter mass load of nitrate+nitrite-N to the subsurface was 17 lb/acre (Table 4). The loading estimate for the 1993 summer application season was 57 lb/acre. This assumes that none of the organic nitrogen was converted to nitrate-N, a conservative estimate during the summer. Winter loading, therefore, makes up about 23% of the combined annual loading.

Table 4. Estimates of nitrate-N mass moving below the root zone during winter 1995-96.

Date	Precipitation (In)*	Precipitation (cm)	Precipitation (L/acre) **	***Lysimeter NO3+NO2-N (mg/L)^	NO3+NO2-N percolating (g/acre)^^	NO3+NO2-N percolating (lb/acre)^^^
	(1)	(2)	(3)	(4)	(5)	(6)
November	1.38	3.5	1.4E+05	5.7	8E+02	1.8
December	2.63	6.7	2.7E+05	5.7	2E+03	3.4
January	2.23	5.7	2.3E+05	5.7	1E+03	2.9
February	2.93	7.4	3.0E+05	5.7	2E+03	3.8
March	1.61	4.1	1.7E+05	5.7	9E+02	2.1
April	2.15	5.5	2.2E+05	5.7	1E+03	2.8
Total	12.9		1.3E+06			16.7

* Precipitation data for Spokane, Washington, from the Western Regional Climate Center, Reno, Nevada.
** L/acre= Precipitation (cm) x (4.047x107cm2/acre)/(1,000 cm3/L).
*** Lysimeter = soil pore-water sampler.
^ Mean concentration of NO3+NO2-N in capillary wick soil pore-water samplers at both fields.
^^ Mass of NO3+NO2-N percolating (g/acre) = (3) x (4) mg/ (1,000 g/mg).
^^^Mass percolating to subsurface(lb/acre) = (5) g x 0.0022lb/g.

Predicted ground water nitrate-N increase

The increase in nitrate concentration in underlying ground water was calculated by combining the loading of nitrate+nitrite-N from summer 1993 and winter 1995-96 as if representing a typical year. Table 5 shows the results of mixing the nitrate+nitrite-N load with the top ten feet of the aquifer. Nitrate+nitrite-N concentrations would be expected to increase by about 5 mg/L, assuming that the aquifer has a porosity of 0.25 or 0.30, typical for coarse sand.

It is not known how the loading observed compares with loading that occurs with typical farming practices. Nitrogen leaches wherever plants are growing due to decaying and mineralization of roots and other plant debris.

Evaluation of soil pore-water sampler longevity

The wick samplers lasted longer than the suction samplers only because they were better protected. Three-foot high, four-inch diameter PVC well casing was used to house the 1/4-inch sample tubing for the wick samplers. Sample tubing for all but two of the suction samplers was not protected. The exposed tubing, although flagged, was cut by a hay mower.

Table 5. Estimated annual increase in ground water nitrate-N concentration below the Deer Park land application site using porosity values of 0.25 and 0.30. Growing season data (May-October 1993) are from Carey (1995). The non-growing season is November 1995-April 1996.

Field No.	Volume leached (acre-ft/yr) (1)	Volume of voids in the top 10 feet of aquifer (acre-ft) (2)	Volume total* (acre-ft) (3)	Volume total (L)** (4)	NO3+NO2 leached (lb/acre)^ (5)	Total acreage (acres) (6)	NO3+NO2-N leached (lb) (7)	NO3+NO2-N leached (mg) (8)	NO3+NO2-N increase in ground water (mg/L) (9)
Porosity = 0.25									
Growing Season	263	400	663	8.15E+08	57	160	9,120	4.1E+09	5.1
Non-Growing Season	194	400	594	7.31E+08	17	160	2,720	1.2E+09	1.7
Total	457	400	857	1.05E+09	74	160	11,840	5.4E+09	**5.1**
Porosity = 0.30									
Growing Season	263	480	743	9.14E+08	57	160	9,120	4.1E+09	4.5
Non-Growing Season	194	480	674	8.29E+08	17	160	2,720	1.2E+09	1.5
Total	457	480	937	1.15E+09	74	160	11,840	5.4E+09	**4.7**

* Volume total (acre-feet)= Volume leached (acre-feet) + volume (acre-feet) of space in the top 10 feet of the aquifer voids.

** Volume total (L) = volume total (acre-feet) x 1.23 x 10(exp6)(L/acre-feet).

^ Mean NO3+NO2-N percolating below the root zone to Fields 4 and 6 (Tables 6).

(7)=(5)x(6)

(8)=(7) x 453,600 mg/kg

(9)=(8)/(4)

Recommendations

Recommended activities for monitoring and interpreting data from the City of Deer Park site and other land application facilities are described below.

Deer Park

- Compare estimates for nitrate mass loading to the subsurface at Deer Park to sites nearby where normal crop production occurs.
- Compare the estimated increase in ground water nitrate with data from new monitoring wells at the site.
- Model ground water nitrate changes under different loading simulations using an unsaturated zone computer model, i.e., SWMS_2D (Simunek, et al, 1994) or VS2D (Healy, 1990).
- Re-seed and manage the areas overlying the wick lysimeters as similar to the field as possible. Collect another annual cycle of nitrogen data from the wick soil pore-water samplers to get a more accurate estimate of soil pore-water quality.

Other land application facilities

- Use soil pore-water monitoring at other small municipal land application facilities where ground water is difficult to monitor.
- Design future soil pore-water monitoring networks so that the vegetation overlying the samplers is managed as similar to the area of interest as possible.
- Use modeling based on soil pore-water data to fine-tune effluent application to protect ground water quality.

References

Carey, B., 1995. Vadose zone monitoring at Deer Park, Washington, a municipal effluent land application site. Dept. of Ecology Publication No. 95-303, 39p.+ appendices.

Healy, R.W., 1990. Simulation of solute transport in variably saturated porous media with supplemental information on modifications to the USGS's computer program VS2D. U.S. Geological Survey Water-Resources Investigations Report 90-4025, 125p.

Simunek, J., T. Vogel and M. Th.van Genuchten, 1994. The SWMS_2D code for simulating water flow and solute transport in two-dimensional variably saturated media. U.S. Salinity Laboratory, Dept of Agriculture, Riverside, CA. Research Report No. 132, 197p.

Western Regional Climate Center, 1996. Desert Research Institute, Atmospheric Sciences Center, Reno, NV.

Contacts

Barbara Carey
Washington State Department of Ecology
Environmental Investigations and Laboratory Services
Toxics Investigations Section
(360) 407-6769

For additional copies of this publication, please contact Ecology's Publications Distribution Office at (360) 407-7472 and refer to publication number 97- 308.

The Department of Ecology is an equal opportunity agency and does not discriminate on the basis of race, creed, color, disability, age, religion, national origin, sex, marital status, disabled veteran's status, Vietnam Era veteran's status or sexual orientation.

If you have special accommodation needs or require this document in alternative format, please contact Joan LeTourneau at (360) 407-6764 (voice) or (360) 407-6006 (TDD).

Appendix A. Analytical parameters, methods, and method detection limits for Deer Park land application site.

Parameter	Method of Analysis	Reference	Method Detection Limit
Ammonia-N	350.1	EPA (1983)	0.01 mg/L
Nitrate+ Nitrite-N	353.2	EPA (1983)	0.01 mg/L
Total Persulfate N	4500-NO3 F Modified	APHA (1992)	0.01 mg/L

EPA, 1983. Methods for Chemical Analysis of Water and Wastes, EPA-600/4-79-020. Revised March 1983.

American Public Health Association, 1992. Methods for the Examination of Water and Wastewater, 18th Edition.

Appendix B. Quality Assurance

Rinsate blank

A rinsate blank for the wick samplers was collected on April 26, 1996 as described in the **Methods Section** which resulted in the following:

TPN: 0 037 mg/L
Ammonia-N: below the detection limit of 0.010 mg/L
Nitrate+nitrite-N: 0.014 mg/L